# ABBREVIATIONS

| | | | |
|---|---|---|---|
| ADA | AMERICAN WITH DISABILITIES ACT | MAT | MATERIAL |
| ADD'L | ADDITIONAL | MAX | MAXIMUM |
| ADJ | ADJUSTABLE | MECH | MECHANICAL |
| AFF | ABOVE FINISHED FLOOR | MFG | MANUFACTURING |
| AL | ALUMINUM | MIN | MINIMUM |
| BD | BOARD | MIR | MIRROR |
| BLDG | BUILDING | MNF | MANUFACTURER |
| BLK | BLOCKING | MR | MOISTURE RESISTANT |
| BLK'G | BLOCKING | MTL | METAL |
| CJ | CONTROL JOINT | NIC | NOT IN CONTRACT |
| CLG | CEILING | NO. | NUMBER |
| CMU | CONCRETE MASONRY UNIT | O.C. | ON CENTER |
| CONC | CONCRETE | OD | OUTSIDE DIA./DIMENSION |
| CONTIN | CONTINUOUS | OPP | OPPOSITE |
| DIA | DIAMETER | OPP.HD. | OPPOSITE HAND |
| DIAM | DIAMETER | PCF | POUNDS PER CUBIC FOOT |
| DF | DRINKING FOUNTAIN | PLYWD | PLYWOOD |
| DS | DOWN SPOUT | PR | PAIR |
| DTLS | DETAILS | PTAC | PACKAGED THERMAL A/C |
| DWGS | DRAWINGS | REINF | REINFORCED |
| EA | EACH | REQ'D | REQUIRED |
| EJ | EXPANSION JOINT | SAT | SUSP. ACOUSTICAL TILE |
| EL | ELEVATION | SBC | STANDARD BUILDING CODE |
| ELEC | ELECTRICAL | SC | SOLID CORE |
| ELEV | ELEVATION | SCH | SCHEDULE |
| EQ | EQUAL | SCHED | SCHEDULE |
| EWC | ELECTRIC WATER COOLER | SD | SOAP DISPENSER |
| EXP | EXPANSION | SH | SHEET |
| FD | FLOOR DRAIN | SHT | SHEET |
| FE | FIRE EXTINGUISHER | SIM | SIMILAR |
| FEC | FIRE EXTINGUISHER CABINET | STL | STEEL |
| FF | FINISH FLOOR | STRUCT | STRUCTURAL |
| FLR | FLOOR | SYS | SYSTEM |
| FOS | FACE OF STUD | TB | TACK BOARD |
| FR | FIRE RATED | TOS | TOP OF STEEL |
| FRP | FIBERGLASS REINFORCED PANEL | TP | TOILET PAPER DISPENSER |
| GB | GYPSUM BOARD | TRTD | TREATED |
| GYP | GYPSUM | TS | TACK STRIP |
| HC | HANDICAPPED | TYP | TYPICAL |
| HD | ELECTRIC HAND DRYER | TV | TELEVISION |
| HGT | HEIGHT | U.L. | UNDERWRITER LABORATORY |
| HORIZ | HORIZONTAL | UNO | UNLESS NOTED OTHERWISE |
| HM | HOLLOW METAL | V.I.F. | VERIFY IN FIELD |
| HND | HAND | VCT | VINYL COMPOSITION TILE |
| HT | HEIGHT | VERT | VERTICAL |
| HTS | HEIGHTS | VT | VINYL TILE |
| HVAC | MECHANICAL | W/ | WITH |
| ID | INSIDE DIAMETER/DIMENSION | WC | WATER CLOSET |
| LAV | LAVATORY | WD | WOOD |

NOTE: THESE ARE THE MOST COMMONLY USED ARCHITECTURAL ABBREVIATIONS IN THESE PLANS. REFER TO STRUCTURAL, MECHANICAL & ELECTRICAL PLANS FOR ADDITIONAL ABBREVIATIONS.

# INDEX TO DRAWINGS


| | | | |
|---|---|---|---|
| | GENERAL | | |
| G-001 | TITLE SHEET, INDEX, VICINITY MAP | | |
| G-002 | GENERAL NOTES & SPECIFICATIONS | | |
| | | | CIVIL |
| | ARCHITECTURAL | C1.1 | GEOMETRIC SITE PLAN |
| A-001 | LIFE SAFETY PLAN | C1.2 | SWPPP & EROSION CONTROL |
| A-002 | STAIR NOTES/DETAILS | C1.3 | PAVING AND SITE DETAILS |
| A-102 | FLOORPLAN & NOTES | C1.4 | SITE NOTES |
| A-103 | WINDOW/DOOR SCHEDULES & DETAILS | C3.1 | DRAINAGE PLAN |
| A-104 | RESTROOM PLAN & DETAILS | | |
| A-105 | REFLECTIVE CEILING PLAN & DETAILS | | |
| A-106 | FINISH SCHEDULE | | |
| A-201 | FRONT & REAR ELEVATIONS | | |
| A-301 | BUILDING SECTIONS | | |
| A-302 | BUILDING SECTIONS | | |
| A-401 | NOTES AND DETAILS | | |
| A-402 | FRAMING SECTIONS BAPISTRY & STAGE | | |
| | | | |
| | MECHANICAL | | STRUCTURAL |
| M-101 | MECHANICAL PLAN | S-101 | FOUNDATION PLAN |
| M-102 | MECHANICAL DETAILS | | |
| M-103 | MECHANICAL DETAILS | | |
| M-104 | MECHANICAL NOTES | | |
| | | | |
| | ELECTRICAL | | |
| E-101 | POWER & LIGHTING PLAN | | |
| E-103 | ELECTRICAL DETAILS | | |
| E-104 | ELECTRICAL NOTES | | |
| | | | |
| | | | |
| | PLUMBING | | |
| P-101 | PLUMBING PLAN | | |
| P-102 | RISER DIAGRAMS | | |
| P-103 | PLUMBING DETAILS | | |


# SYMBOL SCHEDULE

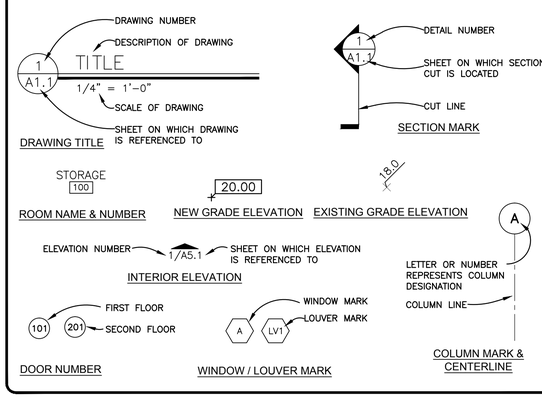


# GENERAL PROJECT NOTES

## GENERAL SCOPE OF WORK

1. INSTALLATION OF NEW FREE-STANDING PRE ENGINEERED METAL BUILDING WITH ASSOCIATED SITE WORK
2. REFERENCE CIVIL PLANS FOR ALL SITE SPECIFIC SPECIFICATIONS AND DETAILS
3. REFERENCE STRUCTURAL PLANS FOR ALL FOUNDATION AND FRAMING SPECIFICATIONS AND DETAILS
4. REFERENCE MECHANICAL PLANS FOR ALL AIR CONDITIONING/HEATING SPECIFICATIONS AND DETAILS
5. REFERENCE ELECTRICAL DRAWINGS FOR ALL POWER AND LIGHTING SPECIFICATIONS AND DETAILS. ALL LOW VOLTAGE, DATA AND ALARM CABLES NEED TO BE INSTALLED BEFORE DRYWALL INSTALLATION
6. REFERENCE PLUMBING PLANS FOR ALL PLUMBING SPECIFICATIONS AND DETAILS
7. LANDSCAPING AND SITE WORK TO BE PERFORMED AS PER PLANS AND SPECIFICATIONS.

## GENERAL CONSTRUCTION NOTES

1. THESE DRAWINGS ARE THE PROPERTY OF THE ENGINEER AND SHALL NOT BE USED WITHOUT CONSENT. DRAWINGS SHALL NOT BE USED FOR ISSUE OF BUILDING PERMIT UNLESS SIGNED AND SEALED BY ENGINEER.
2. THE ENGINEER SHALL BE THE INTERPRETER OF THE CONTRACT. CONSTRUCTION DOCUMENTS SHOW AN OVERVIEW OF THE WORK REQUIRED UNDER THIS CONTRACT AND RELATED REQUIREMENTS AS WELL AS CONDITIONS THAT WILL IMPACT THE PROJECT. ALL DRAWINGS ARE COMPLIMENTARY AND ARE INTENDED TO SHOW THE BASIC CONCEPTS AND COMPLEXITY OF THE PROJECT. THEY DO NOT NECESSARILY SHOW ALL DETAILS AND CONDITIONS.
3. THE OWNER AND CONTRACTOR SHALL HOLD HARMLESS THE ENGINEER FROM AND AGAINST ALL LIABILITY, CLAIMS, DAMAGES, LOSSES, AND EXPENSES INCLUDING LEGAL FEES ARISING OUT OF, OR RESULTING FROM, ERRORS OR OMISSIONS IN THE ENGINEERS DRAWINGS AND THE PERFORMANCE OF THE WORK BY THE CONTRACTOR. ALL WORK AND MATERIALS SHALL MEET THE REQUIREMENTS OF ALL LOCAL AND STATE BUILDING CODES AND ORDINANCES. THE DRAWINGS ARE INTENDED TO SHOW THE GENERAL ARRANGEMENTS AND EXTENT OF WORK TO BE PERFORMED. AS THE WORK PROGRESSES, THE OWNER AND THE CONTRACTOR (AT NO EXTRA COSTS) SHALL MAKE ANY REQUIRED MODIFICATIONS TO ENSURE THE PARTS ALIGN.
4. THESE PLANS HAVE BEEN PREPARED AS PER THE 2015 INTERNATIONAL BUILDING CODE (IBC). THE WORK OF ALL CONTRACTORS SHALL COMPLY WITH THE REQUIREMENTS SET FORTH IN THE AFOREMENTIONED CODE. NO DEVIATIONS FROM THE WORK SHOWN OR REASONABLY IMPLIED SHALL BE UNDERTAKEN WITHOUT THE ENGINEER'S WRITTEN CONSENT.
5. ALL WORK AND MATERIALS SHALL MEET THE REQUIREMENTS OF LOCAL AND STATE CODES AND THE SPEC'S OF THE NATIONAL FIRE PROTECTION AGENCY (NFPA). GENERAL CONTRACTOR SHALL CHECK AND VERIFY ALL PLAN DIMENSIONS AND CONDITIONS BEFORE PROCEEDING WITH CONSTRUCTION. HE SHALL REPORT ANY DISCREPANCIES TO THE ENGINEER FOR CORRECTION PRIOR TO BEGINNING ANY WORK. THE DISCOVERY OF DISCREPANCIES AFTER THE BEGINNING OF WORK WILL BE EVIDENCE OF FAULTY WORK AND SHALL BE THE RESPONSIBILITY OF THE CONTRACTOR. DO NOT SCALE DRAWINGS. ALL WRITTEN DIMENSIONS GOVERN.
6. ALL WORK SHALL BE COMPLETED IN STRICT ACCORDANCE WITH ALL MANUFACTURER'S SPECIFICATIONS, GUIDELINES AND RECOMMENDATIONS.
7. THE SOIL BENEATH CONCRETE SLABS, FOUNDATION WALLS AND FOOTINGS SHALL BE TREATED WITH PESTICIDE BY A LICENSED CONTRACTOR. ALL WORK SHALL BE COMPLETED IN ACCORDANCE WITH STATE AND LOCAL REGULATIONS, RULES, DEFINITIONS AND REQUIREMENTS.
8. ALL REPORTS, PLANS, SPECIFICATIONS, COMPUTER FILES, FIELD DATA, NOTES AND OTHER DOCUMENTS ARE CONSIDERED INSTRUMENTS OF SERVICE AND SHALL REMAIN THE PROPERTY OF THE ENGINEER. THE ENGINEER SHALL RETAIN ALL COMMON LAW STATUTORY AND OTHER RESERVED RIGHTS, INCLUDING THE COPYRIGHT THERETO.
9. DOOR HARDWARE AT ACCESSIBLE DOORS (INCLUDING EXIT ACCESS DOORS) SHALL HAVE A SHAPE THAT IS EASY TO GRASP WITH ONE HAND AND DOES NOT REQUIRE TIGHT GRASPING, TIGHT PINCHING, OR TWISTING OF THE WRIST TO OPERATE. LEVER-OPERATED MECHANISMS, PUSH-TYPE MECHANISMS, AND U-SHAPED HANDLES ARE ACCEPTABLE DESIGNS PER THE 2015 INTERNATIONAL BUILDING CODE (I.B.C.). PANIC HARDWARE MUST BE PROVIDED ON EXIT DOORS.

## SINAGE NOTE

1. SIGNAGE (IF INCLUDED) IS SHOWN FOR ILLUSTRATIVE AND CLARITY PURPOSES ONLY, NOT IN CONTRACT. ALL SIGNAGE TO BE PROVIDED BY OWNER.

## CONTRACTOR NOTES

1. PRIOR TO START OF WORK, GENERAL CONTRACTOR (G.C.), SHALL REVIEW THESE CONSTRUCTION DOCUMENTS AND PRINTED SCOPE OF WORK TO BE PERFORMED UNDER THE CONSTRUCTION CONTRACT WITH A DULY AUTHORIZED REPRESENTATIVE OF THE OWNER. THE ENGINEER DOES NOT REPRESENT THESE DOCUMENTS AS APPROVED BY THE OWNER. SCOPE OF WORK TO BE VERIFIED BY OWNERS REPRESENTATIVE.
2. THE GENERAL CONTRACTOR SHALL MEET WITH ALL SUBCONTRACTORS (EITHER ONE BY ONE OR ALL TOGETHER) ON-SITE PRIOR TO CONSTRUCTION TO VERIFY ANY/ALL EXISTING CONDITIONS PERTAINING TO THIS PROJECT. MINUTES FROM THIS MEETING AND FINDINGS IN THE FIELD SHALL BE SUBMITTED TO THE ENGINEER PRIOR TO CONSTRUCTION
3. IF THESE DRAWINGS AND THE FIELD CONDITIONS ARE NOT IN AGREEMENT, THE CONTRACTOR SHALL NOTIFY THE G.C. AND/OR THE ENGINEER BEFORE STARTING ANY WORK. ANY INCONSISTENCIES NEED TO BE CORRECTED BEFORE INSTALLATION BEGINS. IF THE CONTRACTOR STARTS INSTALLATION WITHOUT THE CORRECTED DRAWINGS, HE/SHE WILL BE RESPONSIBLE FOR ANY AND ALL COSTS (BEYOND THE ORIGINAL CONTRACTED AMOUNT) INCURRED BY NECESSARY CHANGES TO CORRECT THE INCONSISTENCIES.
4. GENERAL CONTRACTOR REMAINS SOLELY LIABLE AND RESPONSIBLE FOR THE FOLLOWING:
   A). VERIFICATION AND MAINTENANCE OF ALL EXISTING SETBACKS, EASEMENTS, AND ANY DEED RESTRICTIONS.
   B). IDENTIFICATION AND REMOVAL OF ANY AND ALL HAZARDOUS MATERIALS, INCLUDING BUT NOT LIMITED TO ASBESTOS-LADEN MATERIALS (NOTIFY OWNER BEFORE REMOVAL, IN WRITING, IF ANY HAZARDOUS MATERIALS ARE DISCOVERED)
   C). VERIFICATION OF LOCATION OF ALL UTILITIES ENTERING INTO SITE FOR THIS PROJECT
   D). COORDINATION OF WORKING HOURS, DELIVERIES, TRASH REMOVAL, STORAGE, ETC WITH OWNER
   E) THE ADEQUACY AND INTEGRITY OF ANY AND ALL STAGING, SCAFFOLDING, SHORING, AND FORM WORK, ALSO ANY AND ALL JOB SITE SAFETY PROGRAMS.
   F). ACCESS PANELS WHERE REQUIRED AS PER PLANS, SPECIFICATIONS, OR INSTRUCTIONS.
5. THE CONTRACTOR SHALL BE RESPONSIBLE FOR COORDINATING ARCHITECTURAL, STRUCTURAL, MECHANICAL AND ELECTRICAL DETAILS AND DIMENSIONS. ANY DISCREPANCIES BETWEEN SUCH DETAILS AND DIMENSIONS SHALL BE REPORTED TO THE ENGINEER PRIOR TO PROCEEDING WITH THE WORK.
6. THE CONTRACTOR SHALL BE RESPONSIBLE FOR ERECTION PROCEDURE AND SEQUENCE TO ENSURE THE INTEGRITY OF THE BUILDING AND ITS COMPONENT PARTS DURING CONSTRUCTION.
7. THE CONTRACTOR FOR THIS PROJECT SHALL INCLUDE ALL MATERIALS AND LABOR REQUIRED TO COMPLETE THE TOTAL PROJECT. THE CONTRACTOR SHALL FURNISH AND PAY FOR ALL MATERIALS, TOOLS, EQUIPMENT, LABOR, MACHINERY, TRANSPORTATION, HEAT, WATER, UTILITIES, AND ALL OTHER FACILITIES AND SERVICES REQUIRED FOR THE SAFE AND PROPER EXECUTION AND COMPLETION OF THE WORK.
8. CONTRACTOR SHALL BE RESPONSIBLE FOR REMOVAL OFF SITE AND CONSTRUCTION DEBRIS IN A TIMELY AND ORDERLY FASHION THROUGHOUT CONSTRUCTION PROCESS AS WELL AS FINAL CLEAN-UP INCLUDING THE REMOVAL OF ALL DEBRIS LEAVING JOB IN A NEW, BROOM CLEAN CONDITION INCLUDING SERVICE AREAS.
9. CLAIMS FOR CONSEQUENTIAL DAMAGES. THE ENGINEER AND THE OWNER MAY CHOOSE TO WAIVE CONSEQUENTIAL DAMAGES FOR CLAIMS, DISPUTES OR OTHER MATTERS IN QUESTION ARISING OUT OF OR RELATING TO THIS PROJECT. THIS MUTUAL WAIVER IS APPLICABLE, WITHOUT LIMITATION, TO ALL CONSEQUENTIAL DAMAGES.
10. ALL WORK SHALL BE COMPLETED IN STRICT ACCORDANCE WITH ALL MANUFACTURER'S SPECIFICATIONS, GUIDELINES, AND RECOMMENDATIONS; AS WELL AS ALL PERTINENT FEDERAL, STATE, AND LOCAL CODES AND ORDINANCES INCLUDING BUT NOT LIMITED TO:
    -NFPA 101 LIFE SAFETY CODE (CURRENT EDITION)
    -INTERNATIONAL ACCESSIBILITY CODE (CURRENT EDITION)
    -INTERNATIONAL BUILDING CODE (CURRENT EDITION)

## OWNERSHIP OF INSTRUMENTS OF SERVICE

1. ALL REPORTS, PLANS, SPECIFICATIONS, COMPUTER FILES, FILED DATA, NOTES AND OTHER DOCUMENTS AND INSTRUMENTS PREPARED BY THE ENGINEER AS INSTRUMENTS OF SERVICE SHALL REMAIN THE PROPERTY OF THE ENGINEER. THE ENGINEER SHALL RETAIN ALL COMMON LAW STATUTORY AND OTHER RESERVED RIGHTS, INCLUDING THE COPYRIGHT THERE-TO.
2. REPRODUCTION OF THESE DOCUMENTS OR DATA CONTAINED HEREIN IS STRICTLY PROHIBITED UNLESS AUTHORIZED IN WRITING.

# CODE DATA

## APPLICABLE CODES

1. ALL WORK UNDER THIS CONTRACT SHALL COMPLY WITH THE PROVISIONS OF THE SPECIFICATIONS AND DRAWINGS, AND SHALL SATISFY ALL APPLICABLE CODES, ORDINANCES AND REGULATIONS OF ALL GOVERNING BODIES INVOLVED. ANY MODIFICATIONS TO THE CONTRACT WORK REQUIRED BY SUCH AUTHORITIES SHALL BE AT THE EXPENSE OF THE SUBCONTRACTOR, SUBJECT TO THE RECEIPT OF AN AFFIDAVIT OR LETTER FROM THE GOVERNING BODY AND OWNER PRIOR TO APPROVAL OF ANY ADDITIONAL COST TO BE INCURRED. ALL PERMITS & LICENSES NECESSARY FOR THE PROPER EXECUTION OF THE WORK SHALL BE SECURED AND PAID FOR BY THE CONTRACTOR INVOLVED. APPLICABLE CODES INCLUDE, BUT ARE NOT LIMITED TO THE FOLLOWING:
   -2015 INTERNATIONAL BUILDING CODE
   -2015 INTERNATIONAL MECHANICAL CODE
   -2015 NATIONAL ELECTRICAL CODE
   -2015 INTERNATIONAL PLUMBING CODE
   -2015 INTERNATIONAL GAS CODE
   -2015 INTERNATIONAL ENERGY CODE
   -2015 NFPA 101 LIFE SAFETY CODE
   -2015 INTERNATIONAL ACCESSIBILITY CODE
   -2015 INTERNATIONAL EXISTING BUILDING CODE
   -2015 INTERNATIONAL FIRE PREVENTION CODE
   -AS WELL AS ANY AND ALL LOCAL/MUNICIPAL ORDINANCES.
   -ABC-4 AMERICANS WITH DISABILITIES ACT

ALL BUILDING, PLUMBING, MECHANICAL AND ELECTRICAL MUST BE DESIGNED ACCORDING TO THE CODES ADOPTED BY THE CITY.

## DESIGN DATA

| | |
|---|---|
| DESIGN CODE / WIND CODE | IBC-15 |
| **DESIGN LOADS** | |
| FLOOR LIVE LOAD [IBC 1607.1] | 125.00 |
| LOADS ABOVE FIRST FLOOR [IBC 1607.1] | N/A |
| CORRIDOR LIVE LOADS [IBC 1607.1] | 100.00 |
| ROOF LIVE LOAD [IBC 1607.1] | 20.00 |
| **SNOW LOAD** | |
| GROUND SNOW LOAD [IBC 1608.2] | $P_g$ = 5.00 |
| SLOPED ROOF SNOW LOAD [IBC 1608.2] | $P_s$ = 0.00 |
| SNOW EXPOSURE FACTOR [IBC 1608.2] | $C_e$ = 1.00 |
| SNOW IMPORTANCE FACTOR, Is: | $I_s$ = 1.00 |
| THERMAL FACTOR, Ct: | $C_t$ = 1.20 |
| SLOPED FACTOR, Cs: | $C_s$ = 1.00 |
| **WIND DESIGN** | |
| BUILDING ENCLOSURE [1604.5] | II - NORMAL |
| ENCLOSURE CLASSIFICATION [ASCE 26.2] | ENCLOSED |
| WIND EXPOSURE [1609.4.3] | C |
| ULTIMATE WIND SPEED (Vult) [1609.3] | 130.00 |
| NOMINAL WIND SPEED (Vasd) [1609.3.1] | 100.70 |
| INTERNAL PRESSURE, CGpi [ASCE 26.11-1] | 0.18/-0.18 |
| C&C WIND PRESSURE (psf) | 47.6/-51.6 |
| ANALYSIS METHOD [ASCE CHAPTER 27] | DIRECTIONAL PROCEDURE |
| **SEISMIC DESIGN** | |
| IMPORTANCE FACTOR [ASCE 11.5] | $I_e$ = 1.00 |
| MAPPED SPECTRAL RES. ACC. [IBC 1613.3] | $S_s$ = 0.091 $S_1$ = 0.059 |
| SOIL (SITE) CLASS [IBC 1613.3.2] | D |
| SPECTRAL RES. ACC. PARAM. [IBC 1613.3.4] | $S_{DS}$ = 0.097 $S_{D1}$ = 0.095 |
| SEISMIC DESIGN CAT. [IBC 1613.3.5 (1)&(2)] | SDC = B |
| BASIC S.F.R.S. [ASCE 12.2 OR 12.14.4] | B |
| DESIGN SHEAR [ASCE 12.8.1 OR 12.14.8.1] | V = 2.716 |
| SEISMIC RESPONSE COEFF. [ASCE 12.8.1.1] | $C_s$ = 0.029 |
| RESPONSE MOD. FACTOR [ASCE 12.2-1] | R = 3.25 |
| ANALYSIS PROCEDURE [ASCE 12.6 OR 12.14] | EQUIV. LATERAL FORCE |

PRELIMINARY DOCUMENT
NOT INTENDED FOR CONSTRUCTION, BIDDING, SALES OR ISSUANCE OF A PERMIT

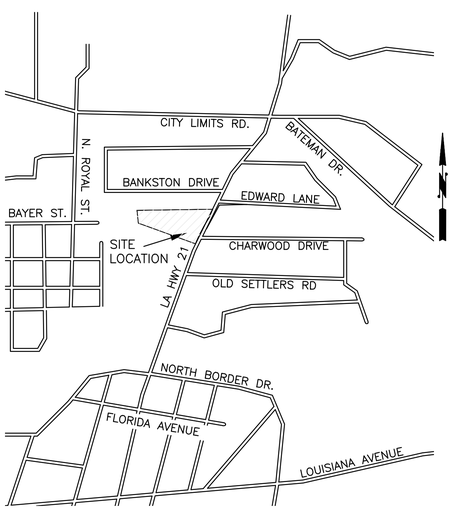


VICINITY MAP
SCALE: N.T.S.

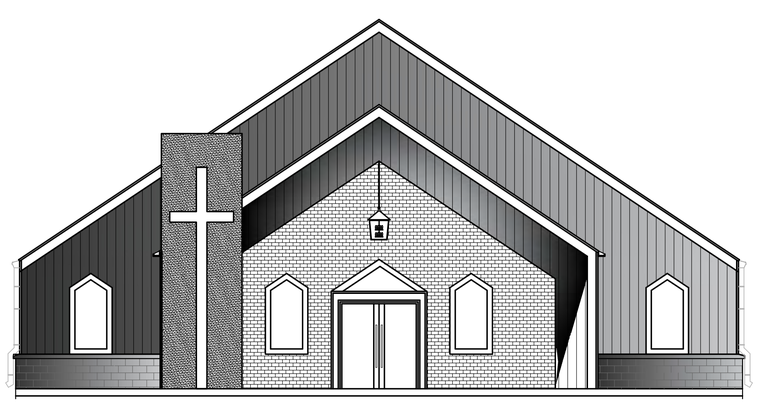

KEY CONCEPT
NOT TO SCALE


NOBLES & ASSOCIATES L.L.C.
PROFESSIONAL ENGINEERS, LAND SURVEYORS, & DESIGNERS
562 COLUMBIA STREET, BOGALUSA, LA. 70427 P: 985-723-0380
800 MARINER'S PLAZA, SUITE 808, MANDEVILLE, LA. 70448 P: 985-727-7221


A NEW BUILDING FOR

# SUPERIOR AVENUE BAPTIST CHURCH

SANCTUARY
HIGHWAY 21
BOGALUSA, LOUISIANA
WASHINGTON PARISH

NAME GEORGE NOBLES
NUMBER 31767
ENGINEER OF RECORD

CODE DATA
ABBREVIATIONS
VICINITY MAP

Job No: DB-0077

| Drawn by: | Checked by: |
|---|---|
| SWL | GBN |
| Date: 01/27/2020 | Revised: |

G001

REVISED: Z:\CONSTRUCTION\NEW JOBS\0077 - Gulf States\Engineering\DWG\G001

COPYRIGHT 2021, NOBLES & ASSOCIATES, L.L.C.

## GENERAL CONDITIONS

1. THE ENGINEER'S BASIC RESPONSIBILITY IS FOR MEMBER SIZE AND STRENGTH, NOT DIMENSION CONTROL OR FIT AND FINISH. SPECIAL CONDITIONS OR LOADS MUST BE BROUGHT TO THE ATTENTION OF THE ARCHITECT AND/OR ENGINEER.
2. THESE PLANS ARE BASED ON INFORMATION PROVIDED TO THIS OFFICE THE ENGINEER SHALL BE ENTITLED TO RELY ON THE ACCURACY AND COMPLETENESS OF THIS INFORMATION IN THE PREPARATION OF THE CONSTRUCTION DOCUMENTS.
3. THE PROJECT SPECIFICATIONS SHALL BE CONSIDERED AN INTEGRAL PART OF THE CONTRACT DOCUMENTS THE CONTRACTOR SHALL REVIEW THE SPECIFICATIONS PRIOR TO CONSTRUCTION AND NOTIFY THE ARCHITECT OR ENGINEER OF ANY DISCREPANCIES BEFORE PROCEEDING WITH THE WORK.
4. THE CONTRACTOR AND ALL SUBCONTRACTORS/TRADES ARE RESPONSIBLE FOR REVIEWING THE ENTIRE SET OF PLANS AND SPECIFICATIONS, TO INCLUDE DIMENSIONS AND SECTIONS ANY DISCREPANCIES MUST BE REPORTED TO THE ARCHITECT AND/OR ENGINEER PRIOR TO FABRICATION OR INSTALLATION OF STRUCTURAL MEMBERS. ENGINEER DOES NOT TAKE RESPONSIBILITY FOR DIMENSIONS OR ARCHITECTURAL FEATURES.
5. CONSTRUCTION SHALL BE BASED UPON THE ENTIRE SET OF CONTRACT DOCUMENTS SOME CRITICAL ITEMS REQUIRED BY OTHER DISCIPLINES MAY NOT BE SHOWN ON THE STRUCTURAL DRAWINGS, SUCH AS WALL, FLOOR, AND ROOF OPENINGS, ARCHITECTURAL, MECHANICAL, AND PLUMBING LOADS, SUPPORT PLATES, ETC. ITEMS SHOWN BY OTHER DISCIPLINES, WHICH REFERENCE THE STRUCTURAL DRAWINGS, BUT ARE NOT SHOWN ON THESE DOCUMENTS, SHALL BE CONSIDERED DESIGN BUILD ITEMS. FOR SUCH ITEMS, THE CONTRACTOR SHALL SUBMIT A DESIGN BY OTHERS FOR REVIEW.
6. THE STRUCTURAL CONSTRUCTION DOCUMENTS REPRESENT THE FINISHED STRUCTURE THEY DO NOT INDICATE THE METHOD OF CONSTRUCTION THE CONTRACTOR SHALL INSTITUTE ALL MEASURES NECESSARY TO ENSURE THE INTEGRITY OF THE STRUCTURE DURING CONSTRUCTION SUCH MEASURES SHALL INCLUDE, BUT NOT BE LIMITED TO, BRACING, SHORING FOR LOADS DUE TO CONSTRUCTION EQUIPMENT, ETC THE STRUCTURAL ENGINEER SHALL NOT BE RESPONSIBLE FOR THE CONTRACTOR'S MEANS, METHODS, TECHNIQUES, OR SEQUENCES USED DURING THE CONSTRUCTION PROCESS, OR THE SAFETY PRECAUTIONS AND THE PROGRAMS INCIDENT THERETO. OBSERVATION VISITS TO THE SITE PERFORMED BY THE ENGINEER OR HIS AFFILIATES SHALL NOT INCLUDE INSPECTION OF THESE ITEMS.
7. SEE ARCHITECTURAL DRAWINGS FOR ELEVATIONS NOT SHOWN AND FOR EXACT LOCATIONS OF ALL SLAB VARIATIONS. THE CONTRACTOR SHALL COMPARE THE STRUCTURAL SECTIONS WITH THE ARCHITECTURAL SECTIONS AND REPORT ANY DISCREPANCIES TO THE ARCHITECT PRIOR TO FABRICATING OR INSTALLING STRUCTURAL MEMBERS.
8. THE CONTRACTOR SHALL COMPLY WITH ALL APPLICABLE SAFETY REQUIREMENTS AND SHALL BE RESPONSIBLE FOR ALL TEMPORARY BRACING AND/OR SUPPORTS THAT MAY BE REQUIRED DUE TO THE CONTRACTOR'S METHODS OR SEQUENCES.
9. THE BUILDING STRUCTURE SHALL NOT BE CONSIDERED LATERALLY STABLE OR ABLE TO RESIST WIND OR SEISMIC FORCES UNTIL THE ENTIRE BUILDING IS COMPLETE OR WRITTEN DOCUMENTATION IS PROVIDED BY THE ENGINEER OF RECORD.
10. CONSTRUCTION MATERIALS SHALL BE SPREAD OUT IF PLACED ON FRAMED CONSTRUCTION, SUCH THAT THE LOADING DOES NOT EXCEED THE DESIGN LIVE LOAD PER SQUARE FOOT, AS SPECIFIED IN THE "LOADS" SECTION.
11. THE CONTRACTOR IS RESPONSIBLE FOR THE TIMELY SCHEDULING OF ALL REQUIRED PRODUCT SUBMITTALS, INSPECTIONS, AND ANY OTHER CONSTRUCTION DOCUMENTATION. PLEASE NOTE THAT SHOP DRAWINGS WHICH AFFECT THE STRUCTURAL PLANS WILL NEED TO BE SUBMITTED BEFORE CONSTRUCTION STARTS.
12. NOTES, DETAILS, AND SCHEDULES HEREIN ARE TYPICAL AND MAY APPLY TO SIMILAR CONDITIONS UNLESS OTHERWISE NOTED OR SHOWN. NOT ALL SECTIONS, SCHEDULES OR NOTES MAY APPLY TO EACH PROJECT.
13. INFORMAT1ON ON THE STRUCTURAL PLANS MAY SUPERCEDE GENERAL NOTES AND DETAILS.
14. FRAMING SHALL ENSURE A CONTINUOUS LOAD PATH FROM POINT OF APPLICATION TO THE FOUNDATION. THIS INCLUDES, BUT IS NOT LIMITED TO, GRAVITY, UPLIFT AND LATERAL LOADS.
15. THIS OFFICE SHALL BE CONSULTED PRIOR TO MODIFYING ANY STRUCTURAL MEMBER, TO INCLUDE PENETRATIONS AND PERFORATIONS, EXCEPT AS PERMITTED BY CODE OR THESE DOCUMENTS.
16. THE CONTRACTOR SHALL ESTABLISH AND COORDINATE ALL REQUIRED OPENINGS, SLEEVES, CURBS AND INSERTS FOR ARCHITECTURAL, MECHANICAL, PLUMBING, AND ELECTRICAL COMPONENTS WITH THE APPROPRIATE TRADES, DRAWINGS, AND SUBCONTRACTORS PRIOR TO CONSTRUCTION.
17. WHERE REFERENCE IS MADE TO TEST STANDARDS FOR MATERIALS OR PROCEDURES, SUCH STANDARDS SHALL BE THE LATEST EDITION AND/OR ADDENDA.
18. OPTIONS ARE PROVIDED FOR THE CONTRACTORS CONVENIENCE. IF AN OPTION IS CHOSEN, THE CONTRACTOR SHALL BE RESPONSIBLE FOR ALL NECESSARY CHANGES AND SHALL COORDINATE ALL DETAILS.
19. WHERE DISCREPANCIES OCCUR BETWEEN PLANS, DETAILS, GENERAL STRUCTURAL NOTES AND SPECIFICATIONS, THE MORE STRINGENT REQUIREMENTS SHALL GOVERN.
20. ANY ENGINEERING DESIGN, PROVIDED BY OTHERS AND SUBMITTED FOR REVIEW, SHALL BEAR THE SEAL OF AN REGISTERED ENGINEER. THE SUPPLIER OF ENGINEERED STRUCTURAL COMPONENTS SHALL BE RESPONSIBLE FOR THE COMPLETE DESIGN AND SHALL USE THE ENTIRE SET OF CONTRACT DOCUMENTS TO INCLUDE ALL LOADS AND DETAIL REQUIREMENTS ASSOCIATED WITH ALL DISCIPLINES. THE SUPPLIER SHALL PROVIDE ANY ADDITIONAL MATERIAL REQUIRED TO MEET THEIR REQUIREMENTS FOR INSTALLATION, SUCH AS WIDER BEARING PLATES, SHIMS, ERECTION BOLTS, ETC
21. THE STRUCTURAL STEEL SUPPLIER SHALL BE REQUIRED TO FURNISH BOLTS REQUIRED FOR OSHA CONNECTIONS.
22. THE CONTRACTOR SHALL INVESTIGATE ACTUAL LOCATIONS OF UNDERGROUND LINES AND UTILITIES BEFORE EXCAVATING AND ADVISE THE ARCHITECT OF ALL CONFLICTS.

### WOOD:

1. DIMENSIONAL LUMBER SHALL CONFORM TO THE NOMINAL DESIGN SPECIFICATION (NDS), LATEST EDITION
2. ALL LUMBER SHALL BE SOUTHERN YELLOW PINE (SYP)
   - BRACING/BLOCKING : UTILITY GRADE
   - WALL STUDS: SYP OR DF-L STUD GRADE (#2 GRADE AT BALLOON FRAMING) U.N.O.
   - PLATES : #3 GRADE OF SYP (VERIFY 15% MOISTURE CONTENT PRIOR TO DRYWALL INSTALLATION, KEEP LUMBER DRY DURING STORAGE)
   - POSTS, BEAMS, HEADERS, ETC : #2 GRADE
3. ALL WOOD FRAMING MEMBERS TO HAVE 19% OR LESS MOISTURE CONTENT (KEEP DRY DURING STORAGE).
4. ALL WOOD FRAMING IN DIRECT CONTACT WITH CONCRETE, MASONRY, OR EXPOSED TO WEATHER SHALL BE TREATED WOOD OR OTHERWISE PROTECTED.
5. DIMENSIONAL LUMBER SHALL CONFORM TO THE MINIMUM DESIGN VALUES AS SHOWN IN "DIMENSIONAL LUMBER DESIGN VALUES" CHART. VALUES ARE NOMINAL 12" DEPTH AND #2 GRADE. REFER TO MANUFACTURER FOR CONVERSIONS TO ALTERNATE GRADES AND SIZES.
6 MANUFACTURED WOOD PRODUCTS (INCLUDING, BUT NOT LIMITED TO, STRUCTURAL WOOD BEAMS AND I-JOISTS) SHALL BE FABRICATED, HANDLED, AND INSTALLED IN ACCORDANCE WITH THE MANUFACTURER'S INSTRUCTIONS PLYWOOD, ORIENTED-STRAND BOARD (OSB), OR WAFERBOARD SHALL COMPLY WITH US DEPARTMENT OF COMMERCE VOLUNTARY PRODUCT STANDARD (PS2).
8 ALL WOOD PRODUCTS SHALL BE GRADE MARKED FOR IDENTIFICATION.
9. ALL LUMBER SHALL GENERALLY BE TRUE AND WITHOUT EXCESSIVE KNOTS, BOWING, CROWNING OR WARPING ALTERNATE MATERIALS ORE ACCEPTABLE IF THEY HAVE EQUIVALENT STRUCTURAL CAPOC1TY AND PERFORMANCE, AS ESTABLISHED BY APPLICABLE CODE EVALUATION REPORTS.
10. FINGER-JOINTED STUDS MUST BE GRADE STAMPED "VERTICAL USE ONLY' (STUD USE ONLY), AND MUST BE RATED FOR SHORT TERM BENDING FORCES OR TENS1ON LOADS FROM LATERAL FORCES SUCH AS WMD/SEISMIC FINGER JOINTED STUDS SHALL NOT BE USED AT HOLD-DOWN LOCATIONS AT ENDS OF SHEAR WALLS.

### DESIGN VALUES FOR DIMENSIONAL LUMBER & STRUCTURAL COMPOSITE LUMBER

| ALLOWABLE STRESS | DIMNESIONAL LUMBER (#2 GRADE) | STRUCTURAL COMPOSITE LUMBER | | |
|---|---|---|---|---|
| | SYP | LVL | PSL | GL |
| BENDING (PSI) | 750 | 2600 | 2900 | 2400 |
| COMPRESSION PARALLEL TO GRAIN (PSI) | 1250 | 2510 | 2900 | 2400 |
| TENSION PARALLEL TO GRAIN (PSI) | 450 | 1555 | 2025 | 1400 |
| HORIZONTAL SHEAR (PSI) | 175 | 285 | 290 | 290 |
| COMPRESSION PERPENDICULAR TO GRAIN (PSI) | 565 | 750 | 625 | 740 |
| MODULUS OF ELASTICITY ($10^6$ PSI) | 1.4 | 1.9 | 2.0 | 1.8 |

1. ALL MATERIALS SHALL COMPLY WITH THE MINIMUM STANDARDS ABOVE.
2. DESIGN VALUES ARE FOR 12" NOMINAL DEPTH, AND #2 GRADE FOR DIMENSIONAL LUMBER. DESIGN VALUES MAY BE DIFFERENT FOR OTHER DEPTHS AND/OR GRADES. SEE MANUFACTURER FOR CONVERSIONS.

## CONVENTIONAL WOOD FRAMING

### GENERAL

1. FRAMING SHALL CONFORM WITH THE IBC AND THE WOOD FRAME CONSTRUCTION MANUAL (WFCM), PUBLISHED BY THE AMERICAN FOREST & PAPER ASSOCIATION (AF & PA).
2. THE MAIN WIND FORCE RESISTING SYSTEM (MWFRS) AND COMPONENTS AND CLADDING (C&C) HAVE BEEN DESIGNED IN ACCORDANCE WITH THE IBC AND/OR WFCM.
3. FOR THE MWFRS, SEE THE PLAN FOR REQUIRED SHEATHING AND HOLD DOWNS INSTALLATION SHALL BE IN ACCORDANCE WITH THE SHEATHING SCHEDULE AND ACCOMPANYING DETAILS.
5. FOR C&C, SEE THE SHEATHING AND CLADDING ATTACHMENT SCHEDULE. WINDOWS AND OPENINGS IN WIND BORNE DEBRIS REGIONS SHALL BE PROTECTED IN ACCORDANCE WITH SECTION 1609.1.2 OF THE IBC.
6. ROOF DECKING SHALL BE A MIN OF 15/32" THICK ORIENTED STRAND BOARD (OSB), EXTERIOR GRADE PLYWOOD, WITH A SPAN RATING. USE BLOCKING OR APPROVED "H'' CLIPS TO SECURE UNSUPPORTED EDGES. REFER TO SHEATHING AND CLADDING SCHEDULE FOR ATTACHMENT
7. FLOOR DECKING SHALL BE A MIN. OF 23/32" THICK ORIENTED STRAND BOARD (OSB), PANEL WAFER BOARD (CDX) OR PLYWOOD, WITH A 48/24 SPAN RATING ALL INTERIOR GRADE MATERIAL SHALL BE GLUED WITH EXTERIOR GLUE REFER TO SHEATHING AND CLADDING SCHEDULE FOR ATTACHMENT AT INTERMEDIATE SUPPORTS WHERE SPANS ARE 48 INCHES OR MORE, NAILING WILL BE 6 INCHES ON CENTER. USE TONGUE AND GROOVE, BLOCKING, OR APPROVED "H'' CLIPS TO SECURE UNSUPPORTED EDGES.
8. FLOOR FRAMING SHALL NOT BE LOADED WITH BUILDING MATERIALS OR OTHER DEAD LOADS WITHOUT APPROVAL OF THE ENGINEER.
9. ALL EXTERIOR OSB SHEATHING SHALL BE PROTECTED WITH A BUILDING WRAP/MOISTURE BARRIER. OSB PANELS SHALL BE PROTECTED FROM EXCESSIVE WETTING DURING STORAGE AND CONSTRUCTION. DO NOT ALLOW OSB PANELS TO SIT IN POOLS OF WATER STORE PANELS INDOORS OR UNDER COVER, WITH ENOUGH SUPPORT TO KEEP PANELS FLAT CLOSE STRUCTURE FROM THE WEATHER AS QUICKLY AS PRACTICAL.

### CONNECTORS:

1. ALL NAILS, LOG SCREWS, AND BOLTS SHALL COMPLY WITH NDS, CHAPTERS 11 AND 12.
2. ALL NAILS SHALL BE COMMON NAILS, UNO. PNEUMATIC CONNECTORS ARE PERMITTED, PROVIDED THEY HAVE THE SAME LENGTH AND SHANK DIAMETER, OR OTHERWISE HAVE EQUIVALENT STRUCTURAL CAPACITY.
3. SPECIFIED HOLD-DOWNS, HANGERS, STRAPS, ETC. ARE BY SIMPSON STRONG-TIE, UNO PRODUCTS BY OTHER MANUFACTURERS MAY BE USED, PROVIDED THEY HAVE EQUIVALENT STRUCTURAL CAPACITY AND HAVE A VALID ICC REPORT. ALL PRODUCTS SHALL BE INSTALLED PER THE MANUFACTURER'S INSTRUCTIONS.
4. ALL CONNECTORS EXPOSED TO WEATHER OR USED IN CONJUNCTION WITH FIRE-RETARDANT LUMBER SHALL BE GALVANIZED OR OTHERWISE PROTECTED FROM CORROSION.
5. CONNECTIONS AND FASTENERS SHALL BE PER THE NAILING SCHEDULE AND IBC TABLE 2304.9.1.
6. WHERE TRUSSES, JOISTS OR BEAMS FRAME INTO A FLUSH BEAM OR GIRDER, THE CONNECTION SHALL CONSIST OF A METAL HANGER OR OTHER FRAMING ANGLE.
7. FRAMING MEMBERS CONSIST1NG OF MULTIPLE PLIES OF DIMENSIONAL LUMBER SHALL BE FASTENED TOGETHER PER THE NAILING SCHEDULE. SIDE-LOADED BEAMS SHALL BE FASTENED TOGETHER WITH 2 ROWS OF 10D NAILS AT 12 INCHES ON CENTER.
8. FRAMING MEMBERS CONSISTING OF MULTIPLE PLIES OF ENGINEERED WOOD PRODUCTS SHALL BE FASTENED PER THE MANUFACTURER'S INSTRUCTIONS. SOLID MEMBERS OF THE SAME NOMINAL SIZE AND CAPACITY MAY BE USED IN LIEU OF BUILT UP MEMBERS.
9. STRAPS AND CLIPS/HOLDDOWNS: THERE ARE TWO SEPARATE SYSTEMS THAT MAY REQUIRE METAL CLIPS AND STRAPS OR HOLDOWNS-ONE IS THE UPLIFT SYSTEM AND THE OTHER IS THE SHEAR WALL SYSTEM. CLIPS AND STRAPS FOR THE UPLIFT SYSTEM ARE DESCRIBED ON THE FRAMING PLANS, WITH ADDITIONAL INFORMATION ON THE ROOF TRUSS TIE SCHEDULE AND ANY SECTIONS ON DETAIL DRAWINGS. HOLDDOWNS AND STRAPS FOR THE SHEAR WALL SYSTEM ARE DESCRIBED ON THE ANCHORING SCHEDULE, WITH LOCATIONS SHOWN ON THE SHEAR WALL PLANS.

### MASONRY NOTES:

1. BRICK ASTM C62 (MINIMUM AVERAGE NET COMPRESSION STRENGTH OF 3350 PSI)
2. MORTAR: ASTM C270 TYPE S
3. GROUT: ASTM C476 (COMPRESSIVE STRENGTH OF GROUT, f'c, SHALL NOT BE LESS THAN 2000 PSI.)
4. CONTROL JOINTS SHALL BE INSTALLED AS REQUIRED TO LIMIT COSMETIC CRACKING. JOINT SPACING IN MASONRY SHALL NOT GENERALLY EXCEED 25 FEET OR 3 TIMES THE WALL HEIGHT.
5. BED JOINT THICKNESS SHALL NOT EXCEED 5/8".
6. JOINT REINFORCEMENT SHALL MEET ASTM A82. PROVIDE THE FOLLOWING MINIMUM CONTINUOUS HORIZONTAL MASONRY REINFORCING AT 16 INCHES C/C UNO. (GALVANIZED STANDARD WEIGHT 9GA DUR-O-WALL D/A 310 TRUSS TYPE OR UAL. LAP LONGITUDINAL WIRES 9" AT EACH SPLICE)

### RAFTERS, JOISTS, & BEAMS:

1. WHERE RAFTERS OR JOISTS CONSIST OF DIMENSIONAL SAWN LUMBER, INSTALLATION SHALL BE PER SECTION 2308.8.
2. RAFTERS AND JOISTS SHALL HAVE MINIMUM 1 1/2 INCHES BEARING AND OPPOSING MEMBERS SHALL LAP M1N1MUM 3 INCHES AT INTERIOR BEARING WALLS.
3. RAFTERS JOISTS SHALL BE SUPPORTED AT THE ENDS BY FULL DEPTH 2X BLOCKING, FULL DEPTH BEAM, BAND OR RIM JOIST. BLOCKING IS ALSO REQUIRED FOR CONTINUOUS FLOOR JOISTS AT PERPENDICULAR LOAD BEARING WALLS ABOVE OR BELOW.
4. RAFTERS AND JOISTS WITH A DEPTH:THICKNESS RATIO GREATER THAN 6:1 SHALL HAVE INTERMEDIATE BLOCKING AT INTERVALS NOT EXCEEDING 8 FEET.
5. FLOOR JOISTS SHALL BE DOUBLED UNDER PARALLEL WALLS OR OTHERWISE PROVIDE FULL BEARING, UNLESS NOTED OTHERWISE. JOISTS UNDER PERPENDICULAR WALLS SHALL BE DESIGNED FOR THE ADDITIONAL LOADS.
6. BEAMS AT DOOR AND WINDOW OPENINGS SHALL BE DROPPED, U.N.O. ALL OTHER BEAMS SHALL BE FLUSH U.N.O.
7. NOTCHES IN SAWN LUMBER SHALL NOT EXCEED ONE SIXTH THE DEPTH OF THE MEMBER, SHALL NOT BE LONGER THAN ONE THIRD THE DEPTH OF THE MEMBER, AND SHALL NOT BE LOCATED IN THE MIDDLE ONE-THIRD OF THE SPAN. NOTCHES AT THE ENDS SHALL NOT EXCEED ONE FOURTH THE DEPTH OF THE MEMBER.
8. HOLES IN SAWN LUMBER SHALL NOT EXCEED ONE-THIRD THE DEPTH OF THE MEMBER, AND SHALL NOT BE WITHIN 2 INCHES OF THE TOP OR BOTTOM EDGE OF THE MEMBER, A NOTCH OR ANOTHER HOLE.

### ROOF AND FLOOR TRUSSES:

1. THE DESIGN AND MANUFACTURE OF METAL PLATE CONNECTED WOOD TRUSSES SHALL COMPLY WITH ANSI/TPI AND BE DESIGNED FOR THE NOMINAL WIND SPEED AND EXPOSURE CLASS PER 1.4 - WIND DESIGN DATA, GENERAL DESIGN CODES AND LOADS.
2. THE TRUSS DESIGN DRAWINGS SHALL BE PREPARED AND SIGNED BY AN ENGINEER REGISTERED IN THE JURISDICTION IN WHICH THE PROJECT IS LOCATED.
3. WOOD TRUSSES SHALL BE FABRICATED, HANDLED, AND INSTALLED IN ACCORDANCE WITH THE MANUFACTURER'S INSTRUCTIONS. TRUSS LUMBER SHALL BE THE GRADE AND SPECIES SPECIFIED ON THE TRUSS DESIGN DRAWINGS. METAL CONNECTOR PLATES SHALL BE OF THE GAUGE, SIZE, AND TYPE SPECIFIED BY THE TRUSS DESIGNER.
4. THE ERECTION, BRACING, AND BLOCKING OF WOOD TRUSSES SHALL BE IN ACCORDANCE WITH THE RECOMMENDATIONS OF THE TRUSS PLATE INSTITUTE (TPI).
5. THE TRUSS MANUFACTURER SHALL REVIEW THE PLANS AND CONTRACT DOCUMENTS FOR ALL APPLICABLE GRAVITY, LATERAL AND UPLIFT LOADS, INCLUDING DRAG LOADS AND/OR SHEAR BLOCKING REQUIREMENTS AT BRACED WALL LINES OR SHEAR WALLS.
6. TRUSS DRAWINGS SHALL BE COMPLETED (AND APPROVED IF REQUIRED) PRIOR TO PLACING THE FOUNDATION, AS LOAD TRANSFER FROM TRUSSES MAY DICTATE CHANGES IN FRAMING MEMBERS, UPLIFT CLIPS AND HOLD DOWNS AT THE FOUNDATION.
7. THE TRUSS MANUFACTURER IS RESPONSIBLE FOR SPECIFYING ALL TRUSS TO TRUSS CONNECTIONS THE CONTRACTOR IS RESPONSIBLE FOR LOAD TRANSFER, BASED ON THE REACTIONS AND FORCES PROVIDED ON THE TRUSS DRAWINGS.
8. THE TRUSS DESIGN DRAWINGS SHALL INCLUDE, AT A MINIMUM, THE FOLLOWING INFORMATION:
   a. DIMENSIONS AND SPACING
   b. DESIGN LOADS
   c. EACH REACTION FORCE AND DIRECTION
   d. JOINT CONNECTOR TYPE AND DESCRIPTION
   e. LUMBER SIZE, SPECIES AND GRADE FOR EACH MEMBER
   f. CONNECTION REQUIREMENTS (TRUSS TO TRUSS GIRDER, TRUSS PLY TO PLY, FIELD SPLICES)
   g. DEFLECTIONS
   h. MAXIMUM TENSILE AND COMPRESSION FORCES IN THE TRUSS MEMBERS
   i. REQUIRED PERMANENT TRUSS MEMBER BRACING LOCATIONS
9. UPLIFT CONNECTIONS SHALL BE TRACED DOWNWARDS FROM THE ROOF TO EITHER THE FOUNDATION OR THE LEVEL AT WHICH THE DL ABOVE IS ADEQUATE TO RESIST UPLIFT FORCES.
10. EVERY ROOF TRUSS SHALL BE FASTENED TO THE TOP PLATE AT ALL BEARING POINTS WITH A MECHANICAL CONNECTOR. CAPACITY OF THE CONNECTOR SHALL MEET THE REQUIREMENTS OF THE TRUSS DRAWINGS, BUT NOT BE LESS THAN 175 POUNDS.
11. REFER TO THE TRUSS TEMPORARY BRACING SCHEDULE FOR BRACING NOTES
12. ROOF TRUSSES SHALL HAVE DIAGONAL BRACING IN THE PLANE OF ALL INTERIOR BEARING WALLS AND BE BLOCKED AT EXTERIOR WALLS PER PLANS. ALL TRUSSES WITH HEEL HEIGHTS OVER 9-½" SHALL HAVE BLOCKING AT BEARING POINTS BETWEEN TRUSSES AT EXTERIOR WALLS TO PREVENT ROTATION.
13. WHERE OVERFRAMING IS REQUIRED AT ROOFS, ROOF SHEATHING SHALL BE CONTINUOUS BELOW THE OVERFRAMING.
14. MANUFACTURED FLOOR TRUSSES SHALL BE DESIGNED FOR THE APPLICABLE LOADS.
15. GIRDER TRUSSES SHALL CARRY LOADS FROM OTHER FRAMING MEMBERS TO SUPPORTS.
16. KNEE TRUSSES SHALL BE INSTALLED WHEN PARALLEL AND OVER BEARING WALLS.
17. WHEN KNEE TRUSSES ARE PARALLEL AND OVER SHEAR WALLS, THEY WILL BE REFERRED TO AS DRAG TRUSSES (DT) AND SHALL BE DESIGNED FOR APPLICABLE DRAG LOADS AS SPECIFIED PER THE SHEATHING SCHEDULE THESE DRAG TRUSSES SHALL BE DESIGNED AS EITHER TWO OR THREE POINT BEARING TRUSSES WITH DIAGONAL MEMBERS. IF NOT DESIGNED AS INDICATED, THE TRUSSES MUST BE FULLY SHEATHED TO MATCH SHEAR WALLS BELOW UPLIFT CONNECTORS MUST BE INSTALLED AT BEARING POINTS AS REQUIRED.
18. WHEN TRUSSES ARE PERPENDICULAR TO LOAD BEARING WALLS, SHEAR BLOCKING OR DIAGONAL BRACING SHALL BE INSTALLED AT INTERIOR BEARING WALLS AT ENDS, RIM JOISTS, RIBBON BLOCKING, FULL HEIGHT BLOCKING, SHEAR BLOCKS OR DIAGONAL BRACING SHALL BE INSTALLED.
19. MANUFACTURED FLOOR SYSTEMS (SUCH AS I-JOISTS) SHALL BE SIZED AND SPACED PER THE MANUFACTURER'S SPECIFICATIONS.
20. TRUSS BEARING SHALL BE AS SPECIFIED BY MANUFACTURER, BUT NOT LESS THAN 1 3/4" RAFTERS, JOISTS & BEAMS.

### COVERINGS OPENINGS AND VENEERS:

1. WALL COVERINGS SHALL COMPLY WITH IBC CHAPTERS 8, 14 & 25. ROOF COVERINGS SHALL COMPLY W1TH IBC CHAPTER 15. COVERINGS, WINDOWS AND OTHER OPENINGS SHALL BE RATED FOR THE WIND LOADING 'PWALL' PER 1.0.5 WIND DESIGN DATA, GENERAL DESIGN CODES AND LOADS.
2. WINDOWS AND OTHER OPENINGS IN WIND BORNE DEBRIS REGIONS SHALL BE PROTECTED PER IBC TABLE 1609.1.2, OR APPROVING AGENCY AS APPLICABLE.
3. MASONRY VENEERS SHALL NOT EXCEED 30' IN HEIGHT OR 40PSF IN WEIGHT, UNLESS NOTED OTHERWISE ON THE PLANS. BRICK TIES SHALL BE MINIMUM 22GA CORRUGATED SHEET METAL AT EVERY STUD, SPACED NOT MORE THAN 16 INCHES ON CENTER EITHER DIRECTION. ADD ADDITIONAL ANCHORS AROUND PERIMETER OF OPENING AT A MAXIMUM OF 24" O.C. AND PLACE ANCHORS WITHIN 12'' OF OPENING. FLASHING IS REQUIRED BENEATH THE FIRST COURSE OF MASONRY AND AT ATHER POINTS OF SUPPORT WEEPHOLES LOCATED IMMEDIATELY ABOVE THE FLASHING SHALL BE MINIMUM 3/16 INCH DIAMETER, SPACED NOT MARE THAN 33 INCHES ON CENTER.
4. STEEL LINTELS SUPPORTING ONLY DEAD LOAD FROM MASONRY SHALL BE DESIGNED IN ACCORDANCE WITH SECTION 2107 OR 2108. LINTELS SHALL HAVE BEARING LENGTH NOT LESS THAN 4 INCHES AND SHALL NOT BE FASTENED TO THE WOOD FRAMING, UNLESS NOTED OTHERWISE.

### STEEL LINTEL SCHEDULE

HEIGHT OF MASONRY VENEER

| LOAD | | SPAN | ALLOW D | 12' | 24' | 36' | 48' | ARCH ACTION |
|---|---|---|---|---|---|---|---|---|
| BRICK | 40 PSF (4' MAX. WIDTH) | 6' | 0.12" | L3 1/2"X3 1/2" X 1/4" | L3 1/2"X3 1/2" X 1/4" | L3 1/2"X3 1/2" X 1/4" | L3 1/2"X3 1/2" X 1/4" | L3 1/2"X3 1/2" X 1/4" |
| | | >6' <8' | 0.16" | L3 1/2"X3 1/2" X 1/4" | L3 1/2"X3 1/2" X 1/4" | L4" X3 1/2" X 1/4" | L5" X3 1/2" X 1/4" | L4 "X3 1/2" X 1/4" |
| | | >8' <12' | 0.24" | L4" X3 1/2" X 1/4" | L5" X3 1/2" X 1/4" | L6" X4" X 5/16" | L6" X4" X 3/8" | L6 "X4" X 5/16" |
| | | >12' <16' | 0.30" | L5" X3 1/2" X 3/8" | L7" X4" X 1/2" | L7" X4" X 1/2" | L8" X4" X 1/2" | L8 "X4" X 1/2" |
| STONE | 60 PSF (4' MAX. WIDTH) | 6' | 0.12" | L3 1/2"X3 1/2" X 1/4" | L3 1/2"X3 1/2" X 1/4" | L3 1/2"X3 1/2" X 1/4" | L4" X3 1/2" X 1/4" | L3 1/2"X3 1/2" X 1/4" |
| | | >6' <8' | 0.16" | L3 1/2"X3 1/2" X 1/4" | L4" X3 1/2" X 1/4" | L5" X3 1/2" X 1/4" | L5" X3 1/2" X 1/4" | L5" X3 1/2" X 1/4" |
| | | >8' <12' | 0.24" | L5" X3 1/2" X 1/4" | L6" X 4" X 5/16" | L6" X4" X 3/8" | L7" X4" X 1/2" | L7" X4" X 1/2" |
| | | >12' <16' | 0.30" | L6" X4" X 3/8" | L7" X4" X 1/2" | L8" X4" X 1/2" | | |

1. ALL ANGLES SHALL BE ORIENTED IN THE STRONG DIRECTION (LONGER LEG VERTICAL)
2. ALL LINTELS WILL EXTEND AT LEAST 4 INCHES BEYOND EACH END OF THE OPENING.
3. THE ARCHING ACTION ASSUMES THAT THE WEIGHT OF THE MASONRY LOAD IS TRANSFERRED AROUND THE OPENING AT 45 DEGREE ANGLE. THIS ASSUMPTION IS VALID WHEN THERE IS SUFFICIENT MASONRY ON BOTH SIDES OF THE OPENING TO CARRY THE LOAD FROM ABOVE.
4. DEFLECTION IS LIMITED TO L/600 OR 0.30" WHICHEVER IS LESS.
5. ANGLES ARE DESIGNED FOR SUPPORTING NON STRUCTURAL MASONRY ONLY. OTHER GRAVITY LOADS SHALL BE CARRIED BY OTHER STRUCTURAL MEMBERS. ANGLES SHALL NOT BE ATTACHED TO HEADER.
6. REFERENCE: BRICK INDUSTRY ASSOCIATION.

### WALL CONSTRUCTION:

1. LOAD BEARING STUDS SHALL BE PER THE FRAMING PLANS.
2. NOTCHING IN ANY STUD IN A NONBEARNG WALL SHALL NOT EXCEED 40 PERCENT OF ITS WIDTH. NOTCHING OF ANY STUD IN AN EXTERIOR OR LOAD BEARING WALL SHALL NOT EXCEED 25 PERCENT OF ITS WIDTH.
3. HOLES IN ANY STUD IN BEARING AND NONBEARING WALLS SHALL NOT EXCEED 40 PERCENT OF ITS WIDTH. HOLE DIAMETER MAY BE INCREASED TO 60 PERCENT OF THE STUD WIDTH IF THE STUDS ARE DOUBLED AND NOT MORE THAN TWO SUCCESSIVE STUDS ARE SO BORED HOLES MAY NOT BE LOCATED WITHIN 5/8 INCH OF THE EDGE OF THE STUD OR IN THE SAME SECTION AS A NOTCH. APPROVED STUD SHOES MAY ALSO BE USED.
4. LOAD BEARING WALLS SHALL HAVE MINIMUM ONE BOTTOM PLATE AND TWO TOP PLATES, HAVING A WIDTH AT LEAST EQUAL TO THE WIDTH OF THE STUDS. THE DOUBLE TOP PLATE SHALL OVERLAP AT CORNERS AND INTERSECTIONS AT BEARING WALLS. TOP PLATE SPLICES SHALL BE IN ACCORDANCE WITH TABLE 3.21 OF THE WFCM, BUT NOT LESS THAN 24 INCHES U.N.O.
5. THE SILL PLATE AT EXTERIOR WALLS SHALL BE ANCHORED TO THE FOUNDATION PER THE SILL PLATE ANCHORAGE SCHEDULE, WITH AT LEAST TWO BOLTS IN EACH SECTION OF SILL PLATE AND WITHIN 12'' OF ALL ENDS AND SPLICES BOLTS SHALL BE AT LEAST 1/2" DIAMETER AND SHALL EXTEND AT LEAST 7 INCHES INTO THE FOUNDATION. THE SILL PLATE AT INTERIOR BEARING WALLS SHALL BE POSITIVELY CONNECTED TO THE FOUNDATION. ADDITIONAL BOLTS MAY BE REQUIRED FOR SHEAR WALLS OR OTHER CONNECTIONS. EQUIVALENT FASTENERS ARE PERMITTED. BOTH SHALL BE INSTALLED WITH 2" X 2" X 1/4" BEARING WASHER PLATE. REFER TO THE SILL PLATE ANCHORAGE SCHEDULE FOR ADDITIONAL INFORMATION.
6. IF DRILLING OR NOTCHING OF THE TOP PLATE EXCEEDS 50 PERCENT OF ITS WIDTH, A 1 1/2" X 16GA GALVANIZED METAL TIE SHALL BE USED ACROSS THE OPENING.
7. HEADERS OR BEAMS AT OPENINGS SHALL BE PER PLANS.
8. THE ENDS OF FLUSH BEAMS AND GIRDERS BEARING ON THE TOP PLATE SHALL BE SUPPORTED BY A FULL-HEIGHT STUD PACK WITH A MINIMUM WIDTH TO MATCH THE BEAM OR GIRDER TRUSS WIDTH, U.N.O. DROPPED HEADERS SHALL BE SUPPORTED BY JACK STUDS. FOR CONVENTIONAL LUMBER, STUD PACK OR JACK STUDS SHALL BE NOT LESS THAN 1 FOR 2X6 AND 2X8 MEMBERS AND NOT LESS THAN 2 FOR 2X10 AND 2X12 MEMBERS FOR MANUFACTURED LUMBER AND TRUSSES, STUDS SHALL PROVIDE FULL BEARING BUT SHALL BE NAT LESS THAN 2. AT UPPER FLOORS, STUD PACKS AND JACK STUDS WITH 2 OR MORE STUDS SHALL BE CONTINUED AT LOWER FLOORS TO THE FOUNDATION, TO INCLUDE BLOCKING THOUGH THE SUB FLOOR AS NECESSARY.
9. AT DROPPED HEADERS, ALL JACK STUDS SHALL HOVE NOT LESS THAN ONE FULL-HEIGHT KING STUD. ADDITIONAL KING STUDS MAY BE REQUIRED AT EXTERIOR WALLS SUBJECT TO WIND LOADS. REFER TO WFCM TABLES 3.23C AND 3.23D. KING STUDS MAY REPLACE REQUIRED JACK STUDS IF A MECHANICAL CONNECTOR IS USED TO FASTEN THE HEADER TO THE KING STUD.
10. WALL SHEATHING SHALL BE PER THE STRUCTURAL PLANS, THE SHEATHING SCHEDULE, AND THE INCLUDED DETAILS. WALLS EXPOSED TO WIND SHALL BE FASTENED WITH THE MORE RESTRICTIVE OF THE MWFRS AND C&C REQUIREMENTS. SHEATHING SHALL BE CONTINUOUS AROUND ALL OPENINGS AND ACROSS THE SUBFLOOR1NG OF ADJACENT STORIES.
11. ROOF, CEILING AND FLOOR SYSTEMS SHALL BE FRAMED, BRACED AND/OR SHEATHED IN ORDER TO PROVIDE DIAPHRAGM ACTION TO TRANSFER LATERAL LOADS FROM ONE STORY TO THE STORY BELOW. ALL RIM JOIST AND DIAPHRAGM SHEATHING SHALL BE CONTINUOUS. ALL DRAG STRUTS, COLLECTORS, AND TOP PLATES SHALL BE CONTINUOUS WITH LAPPED SPLICES
12. REFER TO THE ARCHITECTURAL PLANS OR OTHER CONTRACT DOCUMENTS FOR OTHER REQUIREMENTS (INCLUDING, BUT NOT LIM1TED TO FIRE RATED ASSEMBLIES AND SOUND MITIGATION ASSEMBLIES) NOTIFY THE ARCHITECT AND/OR ENGINEER OF ANY DISCREPANCIES.
13. BEARING WALLS RELY ON INSTALLED SHEATHING FOR THEIR CAPACITY TO SUPPORT DESIGN LOADS PNOR TO INSTALLING SHEATHING, BEARING AND SHEAR WALLS WILL NEED MID HEIGHT BLOCKING OR BRACING TO BE ABLE TO SUPPORT TEMPORARY CONSTRUCTION LOADS.
14. FRAMING SHALL BE INSTALLED PLUMB AND TRUE PRIOR TO INSTALLATION OF SHEATHING.
15. IF NON BEARING WALL TOP PLATES ARE IN CONTACT WITH THE BOTTOM CHORD OF THE FLOOR TRUSS, THE TRUSS MANUFACTURERS SHALL BE NOTIFIED TO CONFIRM TRUSS DESIGN IS ADEQUATE.
16. PLUMBING A 1'' GAP SHALL BE LEFT ABOVE HORIZONTAL CONNECTING PIPES AT STUD PENETRATIONS, TO ALLOW FOR BUILDING SHRINKAGE AND SETTLEMENT. IF BEARING WALL STUD WIDTH IS COMPROMISED BY PLUMBING HOLES, THIS OFFICE SHALL BE NOTIFIED FOR SIMPSON CTS 218 OR EQUAL STUD STRAP RECOMMENDATION.
17. ANY OSB/PIYWOOD REQUIRED FOR SHEARWALLS AND INSTALLED AS A SUPPLEMENTAL COMPONENT TO A FIRE RATED ASSEMBLY SHALL COMPLY WITH THE RATED WALL ASSEMBLY PER THE ARCHITECTURAL PLANS. OSB/PLYWOOD MAY BE FIRE RATED OR INSTALLED OVER THE FIRE RATED ASSEMBLY AND ATTACHED WITH THE APPROPRIATE FASTENERS.

PRELIMINARY DOCUMENT

NOT INTENDED FOR CONSTRUCTION, BIDDING, SALES OR ISSUANCE OF A PERMIT

### TRUSS TEMP. BRACING SCHEDULE

PITCHED ROOF TRUSS TEMPORARY TOP CHORD BRACING

| TRUSS SPAN | LATERAL BRACE SPACING | DIAGONAL BRACE SPACING |
|---|---|---|
| DIAGONAL BRACE SPACING | 8' O.C. | 20' O.C. |
| OVER 32FT TO 48FT | 6' O.C. | 10' O.C. |

PITCHED ROOF TRUSS TEMPORARY BOTTOM CHORD BRACING

| TRUSS SPAN | LATERAL BRACE SPACING | DIAGONAL BRACE SPACING |
|---|---|---|
| UP TO 32 FT | 15' O.C. | 20' O.C. |
| OVER 32FT TO 48FT | 15' O.C. | 10' O.C. |

FLOOR TRUSS STRONGBACKS

| TRUSS SPAN | NUMBER OF ROWS REQD. |
|---|---|
| 0 - 10 FT | 0 |
| 11 - 20 FT | 1 |
| 21 - 30 FT | 2 |

1. STRONGBACKS SHALL BE A MIN 2X6 AND SHALL BE ATTACHED W/A MIN. 3-16D NAILS TO A 2X4 VERTICAL MEMBER AND SHALL BE IN CONTACT W/ THE BOTTOM CHORD. IN THE ABSENCE OF A VERITCAL WEB, A 2X4 VERTICAL SCAB SHALL BE SECURED AT TOP AND BOTTOM CHORDS W/ A MIN 2-16D NAILS AT EACH END.
2. STRONGBACKS SHALL BE PLACED AS STIPULATED IN THE TRUSS DRAWING, IN A QUANTITY NOT LESS THAN STATED IN THE TABLE ABOVE.
3. BRACE ENDS OF STRONGBACKS ACCORDING TO DETAIL ON FLOOR FRAMING SECTIONS AND DETAILS SHEET.
4. ROOF TRUSS CHORD BRACES SHALL BE A MIN. 2X4 AND SHALL BE ATTACHED W/ 2-16D NAILS TO EACH TRUSS.
5. MINIMUM TRUSS BRACING REQUIREMENTS, UNLESS OTHERWISE NOTED ON THE INDIVIDUAL TRUSS DESIGN DRAWINGS.
6. ALL TRUSSES ASSUMED 2'-0" O.C. OR LESS
7. MINIMUM TRUSS PITCH: 4:12. FOR OTHER TRUSSES SEE TPI RECOMMENDATIONS.
8. REFERENCES: IRC SECTIONS R502.11 & R802.10, AND TPI HIB-91

### SHEATHING & CLADDING ATTACHMENT SCHEDULE

| | FRAMING SPACING | SPAN RATING | MIN. SHEATHING[(1)] THICKNESS | INTERIOR ZONE EDGE | INTERIOR ZONE FIELD | PERIMETER EDGE | PERIMETER FIELD |
|---|---|---|---|---|---|---|---|
| ROOF DECKING | 24" O.C. | 32/16 | 15/32" | 6" | 6" | 3" | 3" |
| GABLE ENDWALL RAKE | | 24/16 | 7/16" | | | 3" | 3" |
| EXTERNAL WALL SHEATHING [(2,5)] | 16" O.C. | 24/16 | 7/16" [(6)] | 6" | 6" | 6" | 6" |
| FLOOR DECKING | 24" O.C. | 48/16 | 23/32" | 6" | 12" | 6" | 12" |

1. ALL WOOD SHEATHING SHALL BE ORIENTED STRAND BOARD (OSB) APA RATED SHEATHING OR ZIP WALL, ZIP WALL-R SHEATHING. FASTENERS SHALL BE 8D COMMON NAILS OR 8D GALVANIZED BOX NAILS. (10D NAILS AT FLOOR)
2. INTERIOR WALLS SHALL BE SHEATHED WITH ⅝" GYPSUM WALL BOARD, FASTENED WITH 6D COOLER NAILS OR 1 ¾" DRYWALL SCREWS AT NOT MORE THAN 7" O.C. AT ALL SUPPORTS AND NOT MORE THAN ⅜" FROM EDGES/ENDS OF WALL BOARD.
3. PERIMETER EDGE ZONE SHALL BE USED AT ROOFS WITHIN 4 FEET OF EITHER THE EDGE OF THE ROOF OR THE ROOF PEAK; IT SHALL ALSO BE USED AT WALLS WITHIN 4 FEET OF OUTSIDE OR RE-ENTRANT CORNERS.
4. THESE ARE MINIMUM REQUIREMENTS FOR CLADDING LOADS. REFER TO PLANS AND SHEAR WALL SCHEDULE FOR WALL BRACING AND SHEAR WALL REQUIREMENTS.
5. EXTERIOR WALL SHEATHING SHALL COMPLY WITH THE FIRE RATED WALL ASSEMBLY, REFER TO ARCHITECTURAL PLANS.

### SILL PLATE ANCHORAGE SCHEDULE

| ATTACHMENT ANCHOR TYPE | EMBEDMENT | LOAD AND SPACING: EXTERIOR WALLS | LOAD AND SPACING: INTERIOR WALLS |
|---|---|---|---|
| 1/2" DIA. ANCHOR BOLTS W/ 2X2X1/4" BEARING WASHER | 0'-7" | 3'-4" O.C. | N/A |
| 0.145" DIA. POWDER-ACTUATED FASTNERS (HILIT X-CP72 OR APP. EQ.) | 0'-1 1/4" | N/A | 12" O.C. (6" O.C. AT INT. BEARING LOCATIONS) |

1. THIS SCHEDULE APPLIES TO BASIC ANCHORAGE OF BOTTOM SILL PLATE TO THE FOUNDATION. ADDITIONAL CONNECTIONS MAY BE REQUIRED FOR LATERAL OR UPLIFT FORCES ON THE BUIDLING. SEE THE SHEAR WALL SCHEDULE OR THE SHEATHING SCHEDULE FOR ADDITIONAL REQUIREMENTS.
2. ALTERNATIVE MEANS OF ATTACHING THE SILL PLATE TO THE FOUNDATION ARE PERMITTED, PROVIDING THE CONNECTIONS HAVE EQUIVALENT SHEAR AND UPLIFT CAPACITY AND ARE NOT PROHIBITED BY LOCAL CODE PROVISIONS.
3. REFERENCE SIMPSON STRONG-TIE.
4. SILL PLATE ANCHORAGE AT INTERIOR NON-BEARING WALLS AND NON-SHEAR WALLS MAY BE 0.145" DIA. POWER ACTUATED FASTENERS @ 24" O.C.
5. INI LIEU OF ½" DIA ANCHOR BOLTS OR MASA ANCHORS THE FOLLOWING MAY BE USED:
   5.1. ½" DIA X 6" TITEN HD ANCHORS WITH 2X2X¼" PLATE WASHERS (SAME SPACING AS PER PLANS)
   5.2. DRILL AND EPOXY, ½" DIA F1554 GRADE 36 ANCHOR RODS WITH 2X2X¼" PLATE WASHERS (MIN 6' EMBED), SIMPSONS SET-3G HIGH STRENGTH EPOXY OR APPROVED EQUAL. HOLES SHALL BE THOROUGHLY BLOWN CLEAN PRIOR TO INSALLATION. INSTALL EPOXY PER MANUFACTURER'S RECOMMENDATIONS (SAME SPACING PER PLANS).
6. CARE SHALL BE TAKEN TO AVOID TENDONS WHEN PLACING INTERIOR WALL ANCHORS.

### NAILING SCHEDULE

| NAILING SCHEDULE | FASTEING/LOCATION | FASTEING/LOCATION |
|---|---|---|
| JOIST TO SILL OR GIRDER | 3 - 8d COMMON (TOENAIL) | 3 - 3" X 0.131" NAILS (TOENAIL) |
| BRIDGING TO JOIST | 2 - 8d COMMON (TOENAIL EACH END) | 2 - 3" X 0.131" NAILS (TOENAIL EA. END) |
| SOLE PLATE TO JOIST OR BLOCKING | 16D COMMON @ 16" O.C. (FACENAIL) | 3 - 3" X 0.131" NAILS @ 8" O.C. (FACENAIL) |
| SOLE PLATE TO JOIST OR BLOCKING (BRACED WALL) | 3 - 16D COMMON @ 16" O.C. (FACENAIL) | |
| TOP PLATE TO STUD | 2 - 16D COMMON (ENDNAIL) | 3 - 3" X 0.131" NAILS (ENDNAIL) |
| STUD TO SOLE PLATE | 4 - 8D COMMON (TOENAIL)<br>2 - 16D COMMON (ENDNAIL) | 4 - 3" X 0.131" NAILS (TOENAIL)<br>3 - 3" X 0.131" NAILS (ENDNAIL) |
| DOUBLE STUDS | 16D @ 24" O.C. (FACENAIL) | 3 - 3" X 0.131" NAILS @ 8" O.C. (FACENAIL) |
| DOUBLE TOP PLATES (LAP SPLICE) | 2 ROWS OF 6-16D(12 TOTAL) LAP SPLICE | 2 ROWS OF 7-3" X 0.131"(14 TOTAL) LAP SPLICE |
| DOUBLE TOP PLATES | 16D @ 16" O.C. (FACENAIL) | 3 - 3" X 0.131" NAILS @ 12" O.C. (FACENAIL) |
| TOP PLATES LAPS & INTERSECTIONS | 2 - 16D COMMON (FACENAIL) | 3 - 3" X 0.131" NAILS (FACENAIL) |
| CONTINUOUS HEADER, TWO PIECES | 16D COMMON @ 16" O.C. (ALONG EACH EDGE) | |
| CEILING JOIST TO PLATE | 3 - 8D COMMON (TOENAIL) | 5 - 3" X 0.131" NAILS (TOENAIL) |
| CONTINUOUS HEADER TO STUD | 4 - 8D COMMON (TOENAIL) | |
| CEILING JOIST, LAPS OVER PARTITIONS | 3 - 16D COMMON (FACENAIL) | 4 - 3" X 0.131" NAILS (FACENAIL) |
| CEILING JOISTS TO PARALLEL RAFTERS | 3 - 16D COMMON (FACENAIL) | 4 - 3" X 0.131" NAILS (FACENAIL) |
| BUILT-UP CORNER STUDS | 16D COMMON @ 24" O.C. | 3 - 3" X 0.131" NAILS @ 16" O.C. |
| BUILT-UP GIRDERS & BEAMS | 20D COMMON @ 32" O.C. (FACENAIL TOP, BOTT. & STAGGERED OPP. SIDES) 2 - 20D COMMON (FACENAIL @ ENDS AND EACH SPLICE) (16" EFFECTIVE SPACES) | 3" X 0.131" @ 24" O.C. (FACENAIL TOP, BOTT. & STAGGERED OPP. SIDES) 3 - 3" X 0.131" (FACENAIL) AT ENDS AND AT EACH SPLICE (12" EFFECTIVE SPACING) |
| BUILT-UP WOOD COLUMNS | 16D @ 8" O.C. (2X4'S); 2 ROWS 16D @ 8" O.C. FOR 2X6 OR GREATER | |
| ROOF OR FLOOR TRUSS TO PLATE | 3 - 10D (TOENAIL) | 3 - 3" X 0.148" NAILS (TOENAIL) |
| LEDGER STRIP | 3 - 16D COMMON (FACENAIL @ EACH JOIST) | 4 - 3" X 0.131" NAILS (FACENAIL @ EA. JOIST) |
| BLOCKING @ JOIST/RAFTER TO TOP PLATE | 3 - 8D COMMON (TOENAIL) | 3 - 3" X 0.131" NAILS (TOENAIL) |
| RIM JOIST TO TOP PLATE | 8D @ 6" O.C. (TOENAIL) | 3" X 0.131" NAILS @ 6" O.C. (FACENAIL) |
| RAFTER TO PLATE | 3 - 8D COMMON (TOENAIL) | 3 - 3" X 0.131" NAILS (TOENAIL) |
| COLLAR TIE TO RAFTER | 3 - 10D (FACENAIL) | 4 - 3" X 0.131" NAILS (FACENAIL) |
| JACK RAFTER TO HIP | 3 - 10D COMMON (TOENAIL)<br>2 - 16D COMMON (FACENAIL) | 4 - 3" X 0.131" NAILS (TOENAIL) &<br>3 - 3" X 0.131" NAILS (FACENAIL) |
| RAFTER TIES TO RAFTERS | 2 - 16D COMMON (TOENAIL)<br>2 - 16D COMMON (FACENAIL) | 4 - 3" X 0.131" NAILS (TOENAIL) &<br>3 - 3" X 0.131" NAILS (FACENAIL) |
| ROOF RAFTER TO 2X RIDGE BM | 3 - 8D (FACENAIL) | |
| JOIST TO BAND JOIST | 3 - 16D COMMON (FACENAIL) | 4 - 3" X 0.131" NAILS |

1. SUPPLY RATED CLIPS OR STRAPS FOR UPLIFT FORCES AT TRUSS TO PLATE CONNECTIONS AS NOTED BY THE ROOF TRUSS MANUFACTURER ON THE SUBMITTED DESIGN SHEETS.
2. ON SHEAR WALLS AND DIAPHRAGMS NAILS SHALL BE PLACED NOT LESS THAN ⅜ INCH FROM THE PANEL EDGE
3. REFERENCE IBC TABLE 2304.9.1

NOBLES & ASSOCIATES L.L.C.
PROFESSIONAL ENGINEERS, LAND SURVEYORS, & DESIGNERS
562 COLUMBIA STREET, BOGALUSA, LA. 70427 P: 985-723-0380
800 MARINER'S PLAZA, SUITE 808, MANDEVILLE, LA. 70448 P: 985-727-7221

NEW BUILDING FOR
SUPERIOR AVENUE CHURCH
SANCTUARY
HIGHWAY 21, BOGALUSA, LA 70427

| Rev. No. | Date | Description |
|---|---|---|
| | | |

ENGINEER OF RECORD
NAME GEORGE NOBLES
NUMBER 31767

GENERAL NOTES

Job No. E-00165
Dwn. SWL Chk. GBN
Date 01/25/2022 Rev. REV. 0

G002
Sheet 1 Of *

THESE DRAWINGS ARE THE SOLE PROPERTY OF NOBLES & ASSOCIATES L.L.C., AND ARE ISSUED AS INSTRUMENTS OF SERVICE. THESE DRAWINGS SHALL NOT BE COPIED, REPRODUCED OR USED IN ANY MANNER WITHOUT WRITTEN CONSENT OF NOBLES & ASSOCIATES L.L.C.

REVISED: Z: ENGINEERING\NEW JOBS\E-00165\Superior Avenue Church\DWG\Multipurpose

COPYRIGHT 2021 NOBLES & ASSOCIATES, L.L.C.

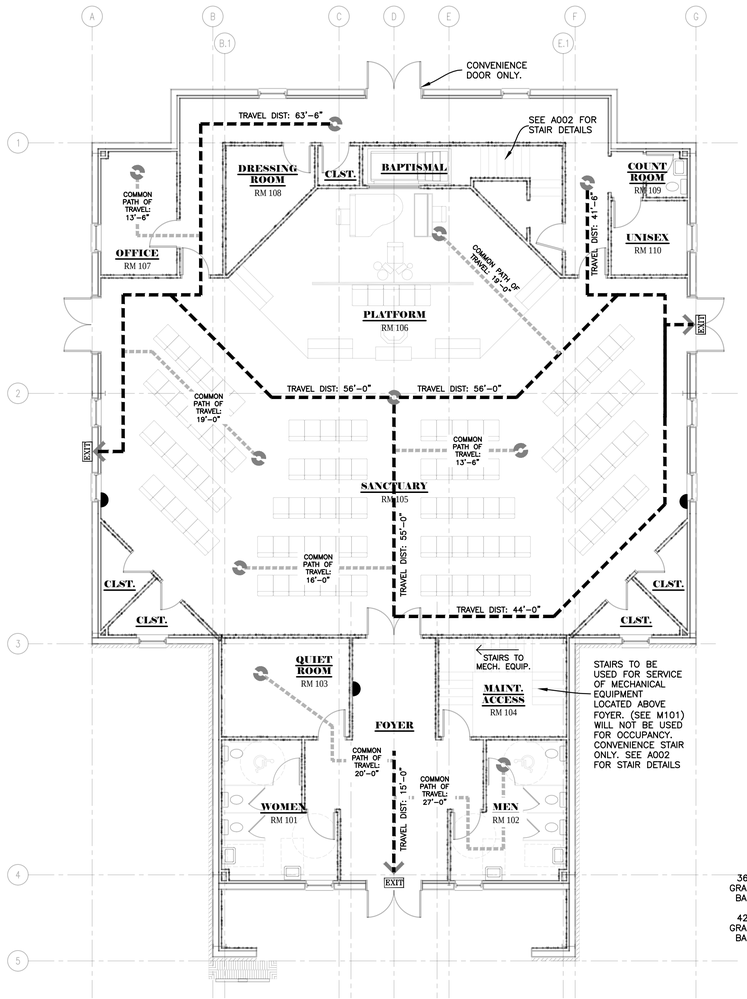


1 A001 LIFE SAFETY PLAN
SCALE: 1/8" = 1'-0"

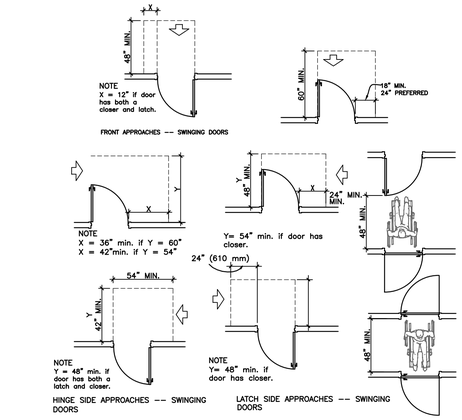


MANEUVERING CLEARANCES AT DOORS

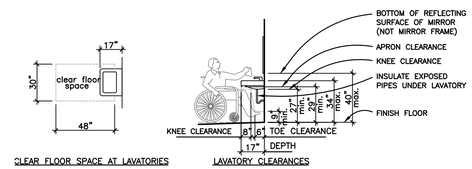


CLEAR FLOOR SPACE AT LAVATORIES
LAVATORY CLEARANCES

LAVATORIES

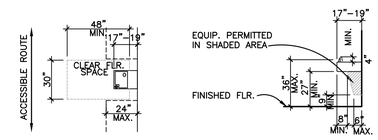


CLEAR FLOOR SPACE
SPOUT HEIGHT AND KNEE CLEARANCE
MIN 50% SHALL BE ACCESSIBLE

DRINKING FOUNTAINS AND WATER COOLERS

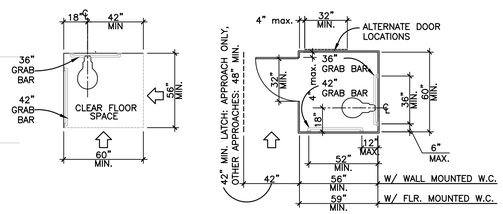


W/ WALL MOUNTED W.C.
STANDARD STALL

TOILETS AND TOILET STALLS

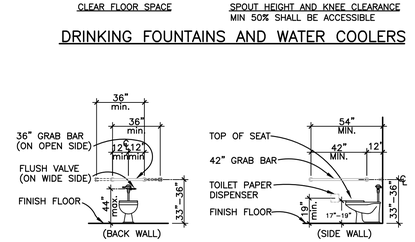


GRAB BARS AT WATER CLOSETS

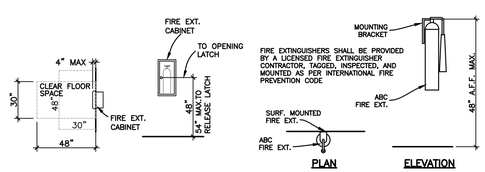


FIRE EXTINGUISHER CABINET CLEARANCES

SURFACE-MOUNT EXTINGUISHER CLEARANCE

1. GRIPPING SURFACE SHALL BE CONTINUOUS.
2. RAILING SHALL RETURN TO WALL OR GUARDRAIL.
3. 1 1/2" CLEARANCE FROM RAIL OR GUARDRAIL.
4. RAIL TO BE PARALLEL TO RAMP AND MUST NOT ROTATE PAST RAMP END

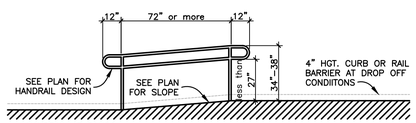


HANDRAIL AT RAMPS
HANDRAIL NOT REQUIRED UNDER 1:20 SLOPE, UNDER 6" RISE OR UNDER 72" LENGTH. GUARDRAIL NOT REQUIRED AT DROP OFFS UNDER 30" HIGH. NOT REQUIRED AT CURB RAMP. HANDRAIL IS REQUIRED AT BOTH SIDES WHERE NO WALL OCCURS

1. GRIPPING SURFACE SHALL BE CONTINUOUS.
2. RAILING SHALL RETURN TO WALL OR GUARDRAIL.
3. 1 1/2" CLEARANCE FROM RAIL OR GUARDRAIL.
4. RAIL TO BE PARALLEL TO RAMP AND MUST NOT ROTATE PAST RAMP END.

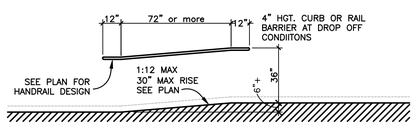


HANDRAIL AT RAMPS - WALL SIDE REQUIRED AT BOTH SIDES WHERE TWO WALLS OCCUR.

RAMPS

## CODE DATA

### N.F.P.A. 101 2015 EDITION

GENERAL SCOPE: CONSTRUCTION OF NEW 5250 SQ. FT. METAL BUILDING FOR RELIGIOUS USE.

| | |
|---|---|
| OCCUPANCY CLASSIFICATION: | MULTIPLE OCCUPANCY -- NON SEPARATED USE (ASSEMBLY - A3: RELIGIOUS) (101:A.6.1.2.1(18)) INCIDENTAL BUSINESS (< 10% MAIN OCCUPANCY) |
| OCCUPANT LOAD (TABLE 101:7.3.1.2): | |
| ASSEMBLY USE (RM 101) | 2868 SF @ 15 SQFT/PERSON = 191 PERSONS |
| BUSINESS USE (RMS 107-109) | 260 SF @ 100 SQFT/PERSON = 3 PERSONS |
| | TOTAL OCCUPANT LOAD: 194 PERSONS |
| MINIMUM CONSTRUCTION REQUIREMENTS: | TYPE V(000); 1 STORY: OL<300; 101:12.1.6 (ASSEMBLY) |
| MIN. NUMBER OF EXITS: | 2 PER, (101:12.2.4) & (101:7.4.1.31) (ASSEMBLY) |
| COMMON PATH OF TRAVEL (CPT): | 20' OL>50; 75' OL<50 (101:12.2.5.1.2) (ASSEMBLY) |
| TRAVEL DISTANCE TO EXIT (TD): | 200' MAX. (101:12.2.6.2) (ASSEMBLY) |
| DEAD END CORRIDOR: | 20' MAX. (101:12.2.5.1.3) (ASSEMBLY) |
| CLASSIFICATION OF HAZARDS CONTENTS: | ORDINARY HAZARD (101:6.2.2.3) (ASSEMBLY) |
| ILLUMINATION OF MEANS OF EGRESS | REQUIRED (101:12.2.8 & 101:7.8) (ASSEMBLY) |
| EMERGENCY LIGHTING: | REQUIRED OUTSIDE (101:12.7.9.1.1) (ASSEMBLY) |
| FIRE ALARM SYSTEM: | NOT REQUIRED OL<300, (101:12.3.4.1.1) (ASSEMBLY) |
| EXTINGUISHER SYSTEM: | PORTABLE, AS PER NFPA 1:13.6.1.2 |
| INTERIOR FINISH | AS PER (101:12.3.3; TABLE A.10.2.2) (ASSEMBLY) |
| WALLS AND CEILINGS | CLASS A, B OR C, OL<300 (ASSEMBLY) |
| EXITS | CLASS A (ASSEMBLY) |
| EXIT ACCESS CORRIDORS | CLASS A OR B (ASSEMBLY) |
| OTHER SPACES | CLASS A, B OR C (ASSEMBLY) |
| INTERIOR FLOOR FINISH | AS PER 101:12.3.3.5 (ASSEMBLY) |
| EXIT ACCESS CORRIDORS & EXIT ENCLOSURES | CLASS I OR II (TABLE A.10.2.2) (ASSEMBLY) |
| SPRINKLER REQUIREMENTS | NOT REQUIRED OL<300, (101:12.3.5.2) (ASSEMBLY) |

### INTERNATIONAL BUILDING CODE 2015 EDITION

GENERAL SCOPE: NEW CONSTRUCTION - 5,250 SQ.FT. METAL BUILDING FOR RELIGIOUS USE.

| | |
|---|---|
| OCCUPANCY CLASSIFICATION: | RELIGIOUS [ORDINARY HAZARD] (IBC 303.4: A-3) |
| CONSTRUCTION TYPE: | VB - NOT SPRINKLERED (TABLE 601) |
| TOTAL SQUARE FOOTAGE: | 5,250 SQFT |
| ALLOWABLE SQUARE FOOTAGE: | 5,250 < 6,000 (IBC TABLE 506.2) |
| BULDING HEIGHT: | 12'-0" |
| FIRE PROTECTION SYSTEMS | |
| SPRINKLER SYSTEM: | NOT REQUIRED (IBC 903.2.1.3) FIRE AREA<12,000 SQ.FT.; OL<300 |
| FIRE ALARM: | NOT REQUIRED (IBC 907.2.1) OL<300 |
| FIRE EXTINGUISHER: | REQUIRED (IBC 906.1) |
| FIRE-RESISTANCE RATING: (TABLE 601) | STRUCTURAL FRAME 0 HRS |
| | BEARING WALLS (INT. & EXT.) 0 HRS |
| | ROOF CONSTRUCTION 0 HRS |
| | EXTERIOR WALLS 0 HRS |
| IBC 2015 WIND LOADING: | ULTIMATE WIND SPEED 132 MPH |
| | ENCLOSED BUILDING |
| | EXPOSURE C (IBC 1609.4) |
| | CATEGORY II (IBC 1604.5) (Iw=1) |

## SYMBOL LEGEND

- COMMON PATH OF TRAVEL (CPT)
- TRAVEL DISTANCE TO EXIT (TD)
- TERMINATION OF COMMON PATH OF TRAVEL
- 1 HOUR RATED PARTITION
- 2 HOUR RATED PARTITION
- EXIT — EXIT TO GRADE
- FIRE EXTINGUISHER CABINET

## CODE NOTES

### AISLE/PATH OF TRAVEL NOTES:

1. THE TOTAL WIDTH OF MEANS OF EGRESS IN INCHES SHALL NOT BE LESS THAN THE TOTAL OCCUPANT LOAD SERVED BY THE MEANS OF EGRESS MULTIPLIED BY THE FACTORS IN CHAPTER 10 AND NOT LESS THAN 36".
2. REQUIRED AISLES SHALL BE NO LESS THAN 36 INCHES IN CLEAR WIDTH.
3. THE AGGREGATE WIDTH OF EXIT AISLES SHALL BE NO LESS THAN THE REQUIRED WIDTH OF THE EXIT.
4. EXIT DISCHARGE SHALL COMPLY WITH ALL PERTINENT CODES AND LOCAL ORDINANCES.

### FIRE EXTINGUISHER NOTE:

1. G.C. TO PROVIDE AND INSTALL (1) PORTABLE FIRE EXTINGUISHER FOR EVERY 1,500 SQ.FT. OF FLOOR AREA (MIN OF 3). TRAVEL DISTANCE TO ANY EXTINGUISHER SHALL NOT EXCEED 75 FEET. ALL EXTINGUISHERS SHALL BE CONSPICUOUSLY LOCATED AND READILY ACCESSIBLE. (ACTUAL LOCATION T.B.D. IN FIELD BY OWNER/G.C. & APPROVED BY FIRE MARSHAL.)

EXTINGUISHER MODEL # SHI-SA:12ABC

PRELIMINARY DOCUMENT
NOT INTENDED FOR CONSTRUCTION, BIDDING, OR SALES

NOBLES & ASSOCIATES L.L.C.
PROFESSIONAL ENGINEERS, LAND SURVEYORS, & DESIGNERS
562 COLUMBIA STREET, BOGALUSA, LA. 70427 P: 985-723-0380
800 MARINERS PLAZA, SUITE 808, MANDEVILLE, LA. 70448 P: 985-727-7221

NEW BUILDING FOR
SUPERIOR AVENUE CHURCH
SANCTUARY
HIGHWAY 21, BOGALUSA, LA 70427

| Rev. No. | Date | Description |
|---|---|---|
| | | |

ENGINEER OF RECORD
NAME GEORGE NOBLES
NUMBER 31767

LIFE SAFETY PLAN

Job No. E-00165

| Dwn. | Chk. |
|---|---|
| SWL | GBN |
| Date | Rev. |
| 01/25/2022 | REV. 0 |

A001
Sheet 1 Of *

THESE DRAWINGS ARE THE SOLE PROPERTY OF NOBLES & ASSOCIATES L.L.C., AND ARE ISSUED AS INSTRUMENTS OF SERVICE. THESE DRAWINGS SHALL NOT BE COPIED, REPRODUCED OR USED IN ANY MANNER WITHOUT WRITTEN CONSENT OF NOBLES & ASSOCIATES L.L.C.

REVISED: Z:\ENGINEERING\NEW JOBS\E-00165\Superior Avenue\DWG\Multipurpose

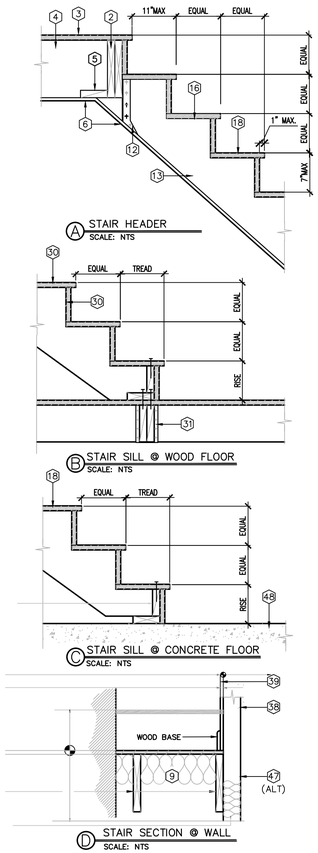


A STAIR HEADER
SCALE: NTS

B STAIR SILL @ WOOD FLOOR
SCALE: NTS

C STAIR SILL @ CONCRETE FLOOR
SCALE: NTS

D STAIR SECTION @ WALL
SCALE: NTS

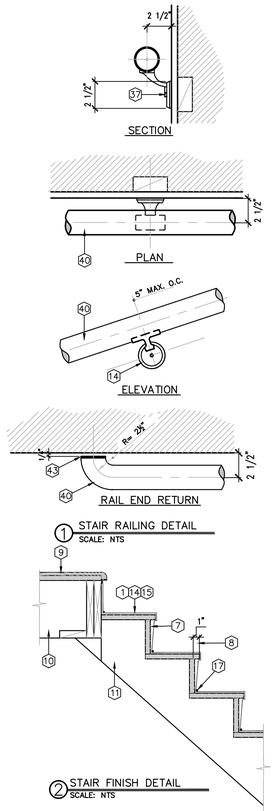


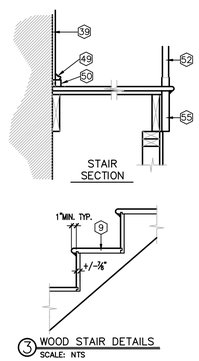


1 A002 WOOD STAIR FRAMING DETAILS
SCALE: N.T.S.

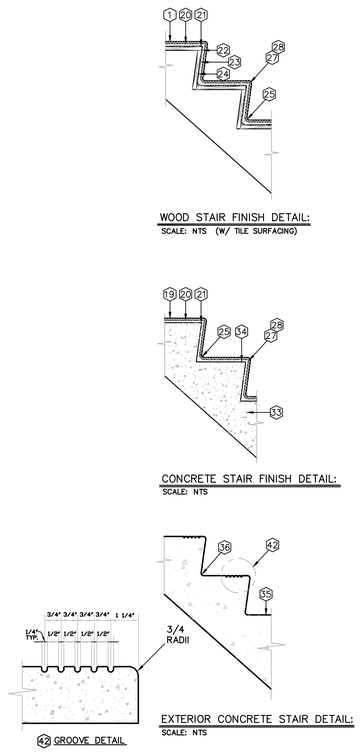


2 A002 VARIOUS STAIR FINISH DETAILS
SCALE: N.T.S.

STAIR USE NOTE:
STAIRS ARE FOR CONVENIENCE ONLY AND WILL NOT BE USED AS A MEANS OF EGRESS OR FOR ANY TYPE OF OCCUPANCY. ONLY USED FOR GAINING ACCESS TO MECHANICAL EQUIPMENT LOCATED ABOVE THE FOYER IN UNOCCUPIED ATTIC SPACE.

PRELIMINARY DOCUMENT
NOT INTENDED FOR CONSTRUCTION, BIDDING, OR SALES

## KEYED STAIR NOTES:

1. NOTE: CARPET STRIP AT CENTRAL OF STAIR ONLY HARDWOOD EDGES. VERIFY DIMENSION AT SIDES
2. DOUBLE 2X FLOOR JOISTS
3. PLYWOOD SUBFLOOR
4. FLOOR JOIST
5. 2X6 BLOCKING
6. INTERIOR "ONE HOUR" RATED FINISH WHERE OCCURRING
7. NOTE: COVE MOLDING NOT SHOWN FOR CLARITY, BELOW NOSING, SEE DET.#1
8. 1" LIP MAXIMUM
9. HARDWOOD FLOORING AND NOSING
10. 2X FLOOR JOIST SEE FRAMING PLAN
11. 2X STAIR STRINGER SEE PLAN
12. "SIMPSON" HU HANGER
13. 2X12 STAIR STRINGERS AT 12" O.C. W/ ONE ADJACENT TO WALL TYPICAL EACH SIDE
14. CARPET TACK STRIP TOP AND BOTTOM AS REQUIRED TYPICAL
15. CARPET OVER PLYWOOD OR HARDWOOD VERIFY IN THE FIELD
16. CUT PLYWOOD RISER OR TREADS, FASTEN TO 2X STAIR STRINGERS W/GLUE AND DRYWALL SCREWS
17. BRASS CARPET HOLDDOWN TYPICAL AT INSIDE OF INSIDE BOTTOM OF EACH STEP
18. NOTE: ALLOW FOR FINISH ON PLYWOOD
19. CERAMIC TILE
20. BOND COAT
21. MORTAR BED: ¾"MIN –1¼" MAX.
22. SCRATCH COAT
23. METAL LATH
24. WATERPROOF MEMBRANE DESIGN REQUIREMENTS
25. USE COVE TILE AT JUNCTION OF RISER AND TREAD FOR MAINTAINING QUARRY OR PAVER TILE. COVE: SET HORIZONTALLY OR VERTICAL TO FACILITATE LAYOUT
26. 
27. FINISHED STEP NOSINGS AREA AVAILABLE IN SPECIFICALLY SHAPED QUARRY AND PAVER TILE PIECES
28. USE FULL RADIUS CERAMIC MOSAIC BULLNOSE TILE FOR NOSINGS
29. SLIP RESISTANT TILE REQUIRED ON STAIR TREADS TYPICALLY
30. ALTERNATE: EXTERIOR GRADE PLYWOOD RISER/TREAD
31. "SIMPSON" HU JOIST HANGERS DOUBLE BLOCKING TO FLOOR JOIST
32. NOTE: ALL PLYWOOD EXTERIOR GRADE TYPICAL ¾" CDX
33. FINISH CONCRETE WITH MEDIUM ROUGH BRUSH
34. HAMMER FINISH FREE OF CRACKS, WAXY OR OILY FILMS AND/OR CURING COMPOUNDS
35. LIGHT BROOM FINISH TYPICAL
36. ¾" RADIUS TOP AND BOTTOM TYP
37. ⅜" DIA. LAG BOLT
38. 2X4 STUDS AT 16" O.C. TYPICAL (WALL)
39. INTERIOR FINISH
40. 1¼" DIA. STD. PIPE HANDRAIL (VERIFY W/ OWNER, WOOD SIM.)
41. 2X BLOCKING W/ 2½" FH WD. SCREWS AT 4" O.C. TYPICALLY
42. TOOL SAFETY GROOVES STOP TOOLS 3" FROM EACH END OF TREAD. OMIT GROOVES IF SCHED. OR DET. CALLS FOR OTHERWISE
43. CAPPED END, WELD AND GRIND SMOOTH
44. METAL BRACKET
45. VERIFY WALL THICKNESS SEE PLANS
46. INTERIOR FINISH ONE HOUR RATED AT STAIR
47. ALT. INSULATE UNDER SIDE OF STAIRS W/ R–19 BATTS
48. SEE STRUCTURAL FOR SLAB THICKNESS AND REINFORCING
49. MOLDING
50. 1⅛" X 1⅜" WOOD WALL STRINGER
51. ¾" PLYWOOD TREAD
52. BALLISTER DOVETAILED INTO TREAD
53. COVE MOLDING
54. 2X12 STRINGERS AT 12" OC. 2/4–16D AT EACH STUD ALT. 3" USE DRYWALL SCREWS
55. 1½" OUTER FINISH WOOD STRINGER
56. INSULATE STAIR WALLS W/ R–11 SOUND BATTS.

## GENERAL STAIR NOTES:

WIDTH:
1. STAIR WIDTH SHALL BE DETERMINED BY IBC 1005.1, BUT THE MINIMUM WIDTH SHALL BE NOT LESS THAN 44 INCHES. STAIRS USED FOR EQUIPMENT ACCESS ONLY MAY BE MIN 22 INCHES IN WIDTH. IF THE ELEVATION CHANGE IS LESS THAN 12 INCHES IN HEIGHT, IBC 1009 REQUIRES A SLOPED SURFACE (1:12 OR LESS) IN LIEU OF STAIRS. NO HANDRAILS REQUIRED IF SLOPE IS LESS THAN 1:20.

HEADROOM:
2. STAIRWAYS SHALL HAVE A HEADROOM CLEARANCE OF NOT LESS THAN 80 INCHES MEASURED VERTICALLY FORM A LINE CONNECTING THE EDGE OF THE NOSINGS. HEADROOM SHALL BE CONTINUOUS ABOVE THE STAIRWAY TO THE POINT WHERE THE LINE INTERSECTS THE LANDING BELOW, ONE TREAD DEPTH BEYOND THE BOTTOM RISER.

RISER, TREADS, & NOSINGS:
3. STAIR RISER HEIGHTS SHALL BE 7 INCHES MAXIMUM AND 4 INCHES MINIMUM. THE RISER HEIGHT SHALL BE MEASURED VERTICALLY BETWEEN THE NOSINGS OF ADJACENT TREADS. RECTANGULAR TREAD DEPTHS SHALL BE 11 INCHES MINIMUM MEASURED HORIZONTALLY BETWEEN VERTICAL PLANES OF THE FOREMOST PROJECTION OF ADJACENT TREADS AND AT A RIGHT ANGLE TO THE TREADS NOSING IF THE STAIR HEIGHT IS GREATER THAN 21 INCHES. FOR ALL PLATFORMS UNDER 21 INCHES IN HEIGHT THE MINIMUM TREAD DEPTH IS 13 INCHES.
4. WINDER TREADS ARE NOT PERMITTED IN MEANS OF EGRESS STAIRWAYS EXCEPT WITHIN A DWELLING UNIT. SEE IBC 1011.5.3 FOR WINDER TREAD DETAILS.
5. STAIR TREADS AND RISERS SHALL BE OF UNIFORM SIZE AND SHAPE. THE TOLERANCE BETWEEN THE LARGEST AND SMALLEST RISER HEIGHT OR BETWEEN THE LARGEST AND SMALLEST TREAD DEPTH SHALL NOT EXCEED ⅜ INCH IN ANY FLIGHT OF STAIRS.
6. WHERE THE BOTTOM OR TOP RISER ADJOINS A SLOPING PUBLIC WAY, WALKWAY OR DRIVEWAY HAVING AN ESTABLISHED GRADE AND SERVING AS A LANDING, THE BOTTOM OR TOP RISER IS PERMITTED TO BE REDUCED ALONG THE SLOPE TO LESS THAN 4 INCHES IN HEIGHT, WITH THE VARIATION IN HEIGHT OF THE BOTTOM OR TOP RISER NOT TO EXCEED ONE UNIT VERTICAL IN 12 UNITS HORIZONTAL OF STAIR WIDTH. THE NOSINGS OR LEADING EDGES OF TREADS AT SUCH NON–UNIFORM HEIGHT RISERS SHALL HAVE A DISTINCTIVE MARKING STRIPE, DIFFERENT FROM ANY OTHER NOSING MARKING PROVIDED ON THE STAIR FLIGHT. MARKING STRIPES SHALL HAVE A WIDTH OF NOT LESS THAN 1 INCH BUT NOT MORE THAN 2 INCHES.
7. NOSINGS SHALL HAVE A CURVATURE OR BEVEL OF NOT LESS THAN 9/16 INCH BUT NOT MORE THAN 9/16 INCH FROM THE FOREMOST PROJECTION OF THE TREAD. RISERS SHALL BE SOLID AND VERTICAL OR SLOPED UNDER THE TREAD ABOVE FROM THE UNDERSIDE OF THE NOSING ABOVE AT AN ANGLE NOT MORE THAN 30 DEGREES FROM THE VERTICAL.
8. THE LEADING EDGE OF TREADS SHALL NOT PROJECT MORE THAN 1¼" BEYOND THE TREAD BELOW.
9. NOSING PROJECTIONS OF THE LEADING EDGES SHALL BE OF UNIFORM SIZE, INCLUDING THE PROJECTIONS OF NOSING'S LEADING EDGE OF THE FLOOR AT THE TOP OF A FLIGHT.
10. RISERS SHALL BE SOLID.

LANDING:
11. THERE SHALL BE A FLOOR OR LANDING AT THE TOP AND BOTTOM OF EACH STAIRWAY. THE WIDTH OF THE LANDINGS SHALL BE NOT LESS THAN THE WIDTH OF STAIRWAYS SERVED. EVERY LANDING SHALL HAVE A MINIMUM WIDTH MEASURED PERPENDICULAR TO THE DIRECTION OF TRAVEL EQUAL TO THE WIDTH OF THE STAIRWAY. WHERE A STAIRWAY HAS A STRAIGHT RUN THE DEPTH NEED NOT EXCEED 48 INCHES. DOORS OPENING ONTO A LANDING SHALL NOT REDUCE THE LANDING TO LESS THAN ONE–HALF THE REQUIRED WIDTH. WHEN FULLY OPEN, THE DOOR SHALL NOT PROJECT MORE THAN 7 INCHES INTO A LANDING. MAXIMUM VERTICAL DISTANCE BETWEEN STAIR LANDINGS IS 12 FT.

MATERIALS:
12. STAIRWAYS SHALL BE BUILT OF MATERIALS CONSISTENT WITH THE TYPES PERMITTED FOR THE TYPE OF CONSTRUCTION OF THE BUILDING, EXCEPT THAT WOOD HANDRAILS SHALL BE PERMITTED FOR ALL TYPES OF CONSTRUCTION.
13. THE WALKING SURFACE OF TREADS AND LANDINGS OF A STAIRWAY SHALL NOT BE SLOPED STEEPER THAN ONE UNIT VERTICAL IN 48 UNITS HORIZONTAL IN ANY DIRECTION.

ENCLOSURES:
14. THE WALLS AND SOFFITS WITHIN ENCLOSED USABLE SPACES UNDER ENCLOSED AND UNENCLOSED STAIRWAYS SHALL BE PROTECTED BY 1 HOUR FIRE RESISTANCE RATED CONSTRUCTION OR THE FIRE RESISTANCE RATING OF THE STAIRWAY ENCLOSURE, WHICHEVER IS GREATER. ACCESS TO THE ENCLOSED SPACE HALL NOT BE DIRECTLY FROM WITHIN THE STAIRWAY ENCLOSURE.

HANDRAILS:
15. STAIRWAYS SHALL HAVE HANDRAILS ON EACH SIDE AND COMPLY WITH IBC SECTION 1014. HANDRAIL HEIGHT, MEASURED ABOVE STAIR TREAD NOSINGS, OR FINISH SURFACE OF RAMP SLOPE, SHALL BE UNIFORM, NOT LESS THAN 34 INCHES AND NOT MORE THAN 38 INCHES.
16. HANDRAILS WITH A CIRCULAR CROSS SECTION SHALL HAVE AN OUTSIDE DIAMETER OF NOT LESS THAN 1¼ INCHES AND NOT GREATER THAN 2 INCHES. WHEN HANDRAIL IS NOT CIRCULAR, IT SHALL HAVE A PERIMETER DIMENSION OF NOT LESS THAN 4 INCHES AND NOT GREATER THAN 6¼ INCHES WITH A MAXIMUM CROSS SECTIONAL DIMENSION OF 2¼ INCHES AND A MINIMUM CROSS SECTIONAL DIMENSION OF 1 INCH. EDGES SHALL HAVE A MINIMUM RADIUS OF 0.01 INCH.
17. HANDRAIL GRIPPING SURFACES SHALL BE CONTINUOUS, WITHOUT INTERRUPTION BY NEWEL POSTS OR OTHER OBSTRUCTIONS.
18. HANDRAILS SHALL NOT ROTATE WITHIN THEIR FITTINGS.
19. HANDRAILS SHALL RETURN TO A WALL, GUARD OR THE WALKING SURFACE OR SHALL BE CONTINUOUS TO THE HANDRAIL OF AN ADJACENT FLIGHT OF STAIRS OR RAMP RUN. WHERE HANDRAILS ARE NOT CONTINUOUS BETWEEN FLIGHTS, THE HANDRAILS SHALL EXTEND HORIZONTALLY NOT LESS THAN 12 INCHES BEYOND THE TOP RISER AND CONTINUE TO SLOPE FOR THE DEPTH OF ONE TREAD BEYOND THE BOTTOM RISER. THE EXTENSIONS OF HANDRAILS SHALL BE IN THE SAME DIRECTION OF THE FLIGHT OF STAIRS AT STAIRWAYS.
20. CLEAR SPACE BETWEEN A HANDRAIL AND A WALL OR OTHER SURFACE SHALL BE NOT LESS THAN 1½ INCHES.
21. IF STAIR WIDTH IS GREATER THAN 69 INCHES, INTERMEDIATE HANDRAILS ARE REQUIRED WITH NOT LESS THAN 20 INCHES CLEAR BETWEEN.
22. GUARDS SHALL BE LOCATED ALONG OPEN–SIDED WALKING SURFACES, INCLUDING MEZZANINES, EQUIPMENT PLATFORMS, AISLES, STAIRS, RAMPS AND LANDINGS THAT ARE LOCATED MORE THAN 30 INCHES MEASURED VERTICALLY TO THE FLOOR OR GRADE BELOW AT ANY POINT WITHIN 36 INCHES HORIZONTALLY TO THE EDGE OF THE OPEN SIDE. GUARDS SHALL NOT BE LESS THAN 42 INCHES HIGH, MEASURED FROM THE LINE CONNECTING THE LEADING EDGES OF THE TREAD NOSINGS.
23. IF GUARDS ARE REQUIRED, GUARDS SHALL NOT HAVE OPENINGS THAT ALLOW PASSAGE OF A SPHERE 4 INCHES IN DIAMETER FROM THE WALKING SURFACE TO THE REQUIRED GUARD HEIGHT.

NOBLES & ASSOCIATES L.L.C.
PROFESSIONAL ENGINEERS, LAND SURVEYORS, & DESIGNERS
562 COLUMBIA STREET, BOGALUSA, LA. 70427 P: 985-723-0380
800 MARINERS PLAZA, SUITE 800, MANDEVILLE, LA. 70448 P: 985-727-7221

NEW BUILDING FOR
SUPERIOR AVENUE CHURCH
SANCTUARY
HIGHWAY 21, BOGALUSA, LA 70427

| Rev. No. | Date | Description |
|---|---|---|
| | | |

ENGINEER OF RECORD
NAME GEORGE NOBLES
NUMBER 31767

STAIR NOTES AND DETAILS

Job No. E-00165
Dwn. SWL Chk. GBN
Date 01/25/2022 Rev. REV. 0

A002
Sheet 11 Of *

COPYRIGHT 2021 NOBLES & ASSOCIATES, L.L.C.
THESE DRAWINGS ARE THE SOLE PROPERTY OF NOBLES & ASSOCIATES L.L.C., AND ARE ISSUED AS INSTRUMENTS OF SERVICE. THESE DRAWINGS SHALL NOT BE COPIED, REPRODUCED OR USED IN ANY MANNER WITHOUT WRITTEN CONSENT OF NOBLES & ASSOCIATES L.L.C.

REVISED: Z:\ENGINEERING\NEW JOBS\E-00165\Superior Avenue Church\DWG\Multipurpose

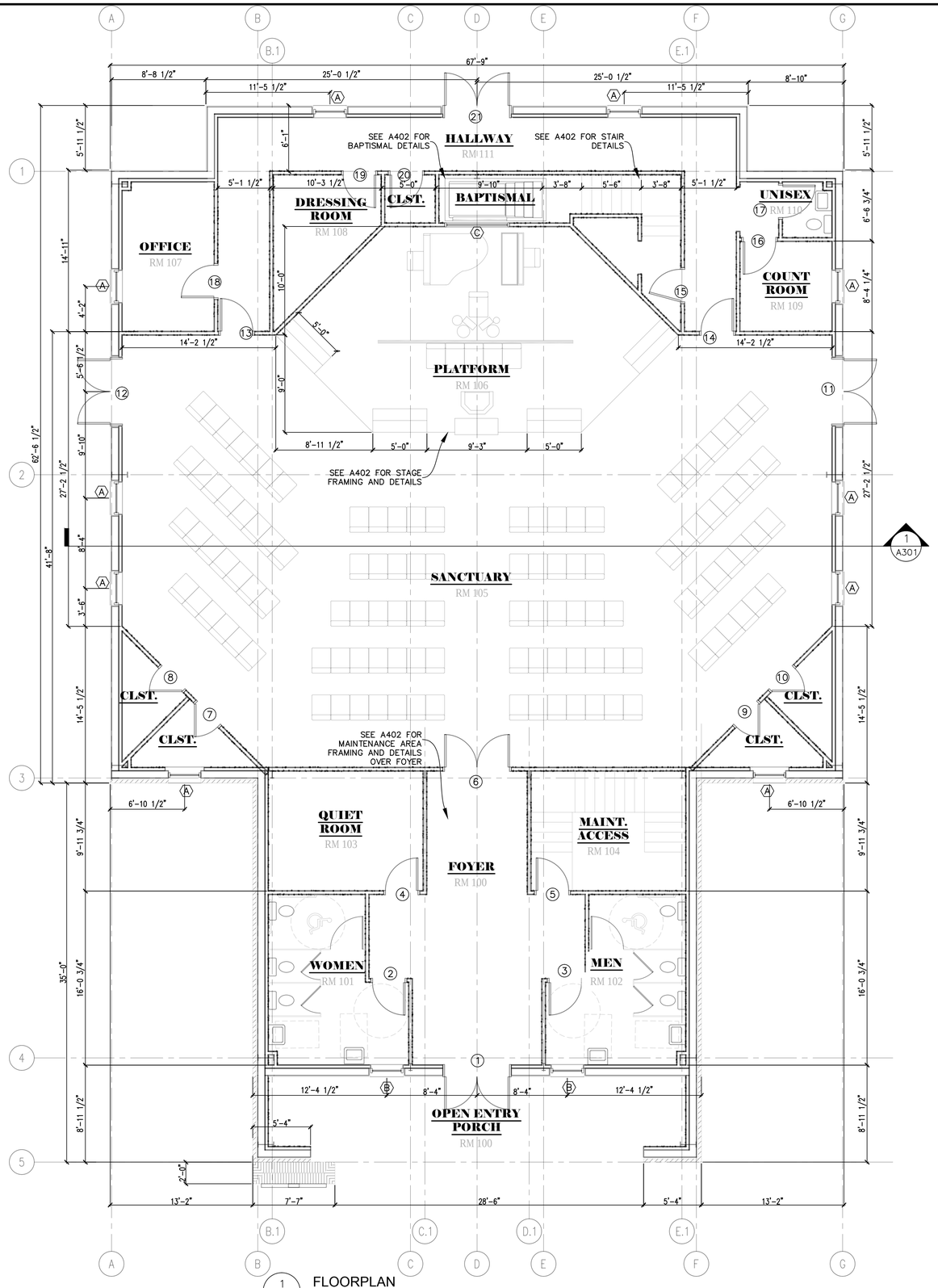


1 A102 FLOORPLAN

SCALE: 3/16"=1'

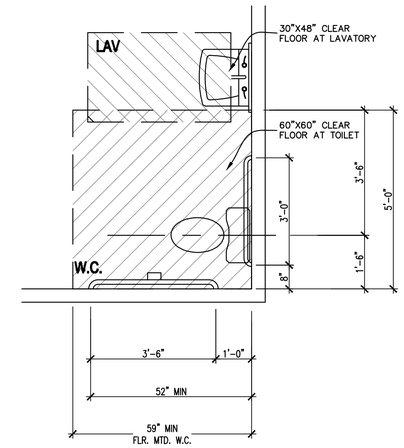


3 A102 TYP. MIN. W.C. & LAV. CLEAR SPACE

SCALE: NTS

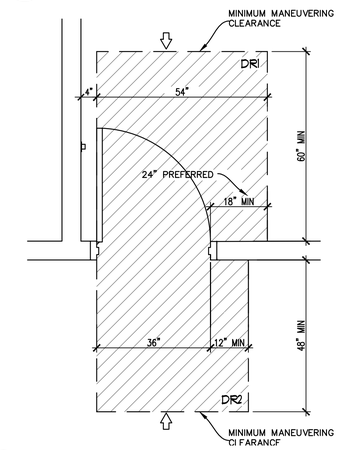


2 A102 TYP. MIN. MANUEVERING CLR. @ DOORS

SCALE: NTS

PRELIMINARY DOCUMENT

NOT INTENDED FOR CONSTRUCTION, BIDDING, SALES OR ISSUANCE OF A PERMIT

## RESTROOM NOTES:

1. LAYOUT OF RESTROOM FACILITIES SHALL COMPLY WITH ALL APPLICABLE STATE AND LOCAL CODES, INCLUDING ALL ADA REQUIREMENTS.
2. U.N.O. (UNLESS OTHERWISE NOTED) – RESTROOM SHALL BE EQUIPPED WITH THE FOLLOWING ACCESSIBLE FOR EACH:
   - 1 EA. 24"X36" WALL MIRROR CONCEALED MOUNTING OVER EACH LAVATORY. INSTALL WITH REFLECTIVE SURFACE @ 40"A.F.F
   - 1 EA. TOILET TISSUE HOLDER APPROVED BY OWNER. INSTALL WITH CENTER LINE @ 24" A.F.F.
   - 1 EA. 1–1/2" X 36" & 42" S.S. CODE APPROVED GRAB BARS WALL (OR FLOOR) MOUNTED AS REQUIRED. INSTALL GRAB BARS @ 34" –36" A.F.F.
   - 1 EA. PAPER TOWEL DISPENSER INSTALL WITH OPERATING MECHANISM @ 48" A.F.F LOCATED ON SIDE WALL TO LAVATORY.
   - 1 EA. CODE APPROVED ROOM IDENTIFICATION SIGN INSTALLED ADJACENT TO STRIKE JAMB/LATCH SIDE OF DOOR WITH HORIZONTAL CENTERLINE @ 60" A.F.F.
   - DOOR HARDWARE MUST BE SINGLE ACTION AND MOUNTED BETWEEN 34" (MIN). AND 48" (MAX.)
   - SPECIFIC FLOOR LOCATIONS OF ITEMS LISTED ABOVE MAY VARY BASED ON SPECIFIC DETAILS. VERIFY WITH OWNER IF ANY DISCREPANCIES ARISE.
   - INSTALL CONTINUOUS FIRE RETARDANT TREATED 2"X6" PINE BLOCKING BETWEEN STUDS FOR ALL HANDRAILS, GRAB BARS, FIXTURES, BRACKETS, ACCESSORIES, CABINETRY, AND MISC SPECIAL TIES AS REQUIRED.
   - 48" X 48" AREA IS REQUIRED TO BE CONSTRUCTED OF NON ABSORBENT MATERIALS IMMEDIATELY ADJACENT ALL WATER CLOSETS ON SIDE AND REAR WALLS. (PAINT IS NOT AN ACCEPTABLE SURFACE FINISH AT THESE AREAS.)
   - USE MOISTURE RESISTANT DRYWALL FOR RESTROOM WALLS AND MOISTURE RESISTANT ACOUSTIC TILES FOR CEILINGS.
3. GRAB BARS SHALL WITHSTAND A LOAD OF 300 LB. WITHOUT PERMANENT DEFLECTION. GRAB BARS TO BE 1–1/2" IN DIAMETER & CONTINUOUS WITH 1–1/2" CLEARANCE FROM THE WALL & CENTER SUPPORT. GRAB BARS SHALL BE INSTALLED PARALLEL WITH THE FLOOR AND SHALL CONFORM TO THE DIMENSIONS SHOWN HEREIN.
4. IF ONE HANDICAPPED TOILET IS PROVIDED ITS HEIGHT MAY BE WITHIN THE RANGE OF 19" TO 20". IF MORE THAN ONE TOILET IS PROVIDED IT SHALL BE AT 20" HEIGHT.
5. AT LEAST (1) MIRROR SHALL BE MOUNTED NO HIGHER THAN 40" FROM THE FLOOR TO THE REFLECTIVE SURFACE OR THE MIRROR SHALL BE TILTED FOR VISIBILITY.
6. ALL DISPENSING MACHINES SHALL BE NO MORE THAN 40" FROM FINISHED FLOOR.
7. PROVIDE A 5'X5' TURNING RADIUS WITHIN THE TOILET ROOM.
8. INCLUDE A FLUSHING MECHANISM OTHER THAN FOOT OPERATED
9. EACH BARRIER FREE TOILET ROOM SHALL HAVE AT LEAST (1) LAVATORY W/A NARROW APRON MOUNTED 29" FROM FINISHED FLOOR TO BOTTOM OF APRON. CONTROLS SHALL BE A MAXIMUM OF 20" FROM THE FRONT LEDGE OF THE VANITY. FROM FLOOR TO LAVATORY RIM SHALL BE 33" HIGH. FAUCETS SHALL HAVE LEVER TYPE HANDLES– NO SELF CLOSING FAUCETS. LAVATORY DRAIN PIPES SHALL BE INSULATED TO PREVENT BURNING.

## RESTROOM SIGNAGE NOTES:

1. SIGNS SHALL INCLUDE THE FOLLOWING REQUIREMENTS:
   - A. RAISED AND BRAILLE CHARACTERS & PICTOGRAMS
   - B. THE CHARCTERS AND BACKGROUND OF SIGNS SHALL BE EGGSHELL, MATTE OR OTHER NON–GLARE FINISH.
   - C. CHARACTERS & SYMBOLS SHALL CONTRACT WITH THEIR BACKGROUND
   - D. LETTERS AND NUMBERS ON SIGNS SHALL HAVE A WIDTH TO HEIGHT RATIO BETWEN 1:1 AND 2:5 AND STROKE WIDTH TO HEIGHT RATIO BETWEEN 1:5 AND 1:10.
   - E. SIGNS SHALL BE INSTALLED ON THE WALL ADJACENT TO THE LATCH SIDE OF THE DOOR AND POSITIONED SUCH THAT A PERSON MAY STAND WITHIN 3'–0" OF THE DOOR AND NOT BE WITHIN THE SWING OF THE DOOR.
   - F. MOUNTING HEIGHT SHALL BE 60" ABOVE THE FINISHED FLOOR TO THE CENTER OF THE SIGN.
   - G. MINIMUM SIZE OF SIGNS SHALL BE 6"X6".
2. PROVIDE SIGNS AT ALL REST ROOM ENTRANCES.

NOBLES & ASSOCIATES L.L.C.
PROFESSIONAL ENGINEERS, LAND SURVEYORS, & DESIGNERS
562 COLUMBIA STREET, BOGALUSA, LA. 70427 P: 985-723-0380
800 MARINERS PLAZA, SUITE 800, MANDEVILLE, LA. 70448 P: 985-727-7221

NEW BUILDING FOR

# SUPERIOR AVENUE CHURCH

SANCTUARY

HIGHWAY 21, BOGALUSA, LA 70427

| Rev. No. | Date | Description |
|---|---|---|
| | | |

ENGINEER OF RECORD
NAME GEORGE NOBLES
NUMBER 31767

FLOORPLAN

| Job No. | E-00165 |
|---|---|
| Dwn. SWL | Chk. GBN |
| Date 01/25/2022 | Rev. REV. 0 |

Sheet A102 1 Of *

COPYRIGHT 2021 NOBLES & ASSOCIATES L.L.C.

REVISED: Z:\ENGINEERING\NEW JOBS\E-00165\Superior Avenue@Church\DWG\Multipurpose

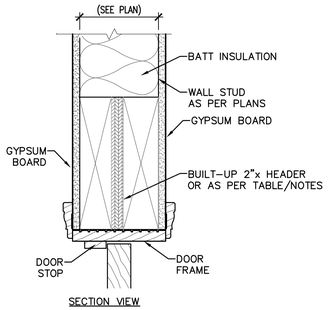


1 / A103 TYP. DOOR JAMB HEADER DETAIL @ INTERIOR WOOD FRAMING

SCALE: 3"=1'

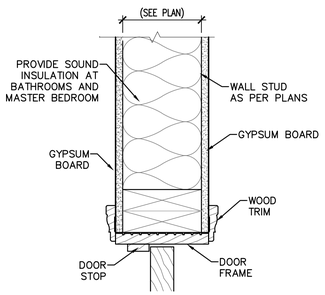


2 / A103 TYP. DOOR JAMB DETAIL @ INTERIOR WOOD FRAMING

SCALE: 3"=1'

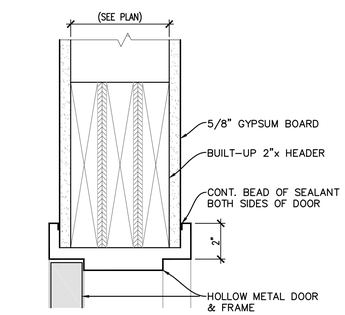


3 / A103 TYP. DOOR JAMB HEADER DETAIL @ INTERIOR WOOD FRAMING

SCALE: 3"=1'

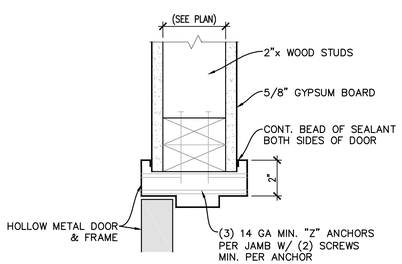


4 / A103 TYP. DOOR JAMB DETAIL @ INTERIOR WOOD FRAMING

SCALE: 3"=1'

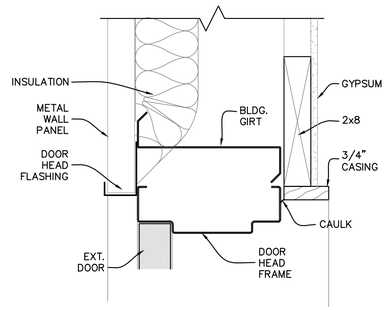


5 / A103 TYP. DOOR HEADER DETAIL @ EXTERIOR METAL BUILDING WALL

SCALE: 3"=1'

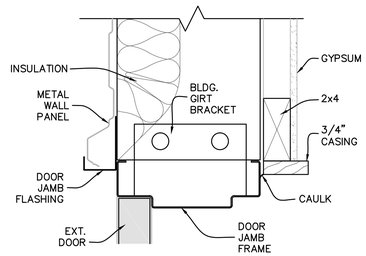


6 / A103 TYP. DOOR JAMB DETAIL @ EXTERIOR METAL BUILDING WALL

SCALE: 3"=1'

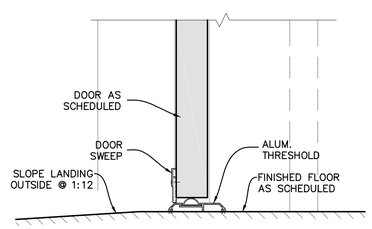


7 / A103 TYP. DOOR SILL DETAIL @ EXTERIOR METAL BUILDING WALL

SCALE: 3"=1'

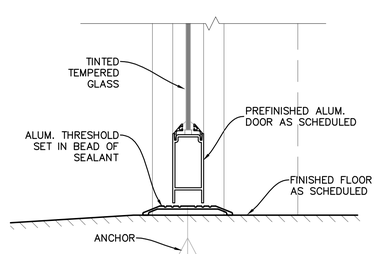


8 / A103 TYP. DOOR SILL DETAIL @ EXTERIOR STOREFRONT DOOR

SCALE: NTS

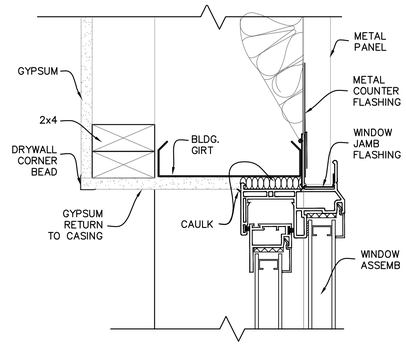


NOTE: SHIM AS REQUIRED

9 / A103 TYP. WINDOW HEADER DETAIL @ EXTERIOR METAL BUILDING WALL

SCALE: NTS

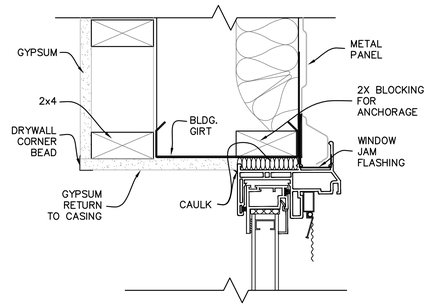


10 / A103 TYP. WINDOW JAMB DETAIL @ EXTERIOR METAL BUILDING WALL

SCALE: NTS

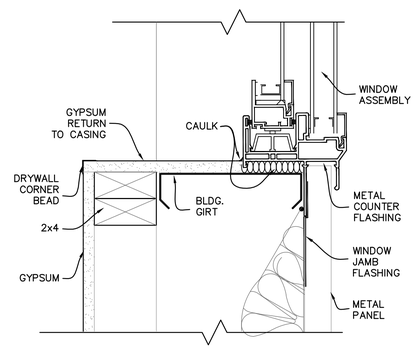


11 / A103 TYP. WINDOW SILL DETAIL @ EXTERIOR METAL BUILDING WALL

SCALE: NTS

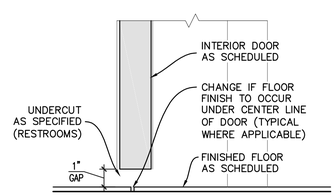


12 / A103 TYP. THRESHOLD DETAIL @ INTERIOR WALL

SCALE: NTS

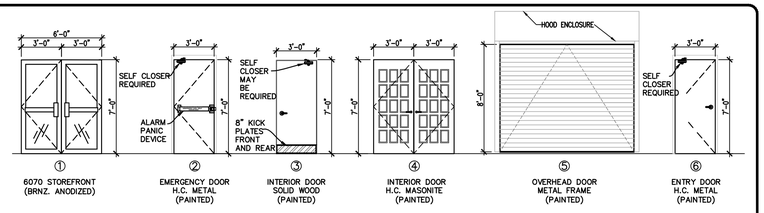


NOTE: VERIFY IN FIELD (V.I.F.) ALL OPENING SIZES AND DIRECTIONS PRIOR TO INSTALLATION

## TYPICAL DOOR TYPES

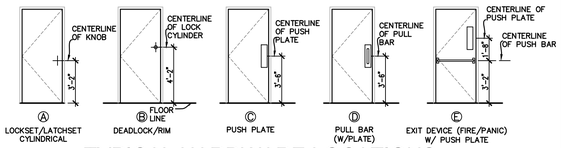


## TYPICAL HARDWARE LOCATIONS:

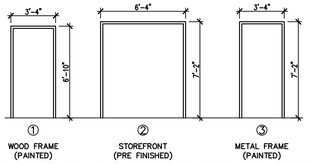


## TYPICAL DOOR FRAME TYPES

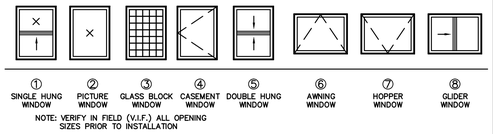


NOTE: VERIFY IN FIELD (V.I.F.) ALL OPENING SIZES PRIOR TO INSTALLATION

## TYPICAL WINDOW TYPES

## DOOR SCHEDULE

| MARK | DOOR TYPE | SIZE WIDTH | SIZE HEIGHT | SIZE THICK. | DOOR MATERIAL | DOOR FINISH | FRAME TYPE | FRAME FINISH | FIRE RATING | HRDWR. TYPE | DETAIL HEAD | DETAIL JAMB | DETAIL THRS. | REMARKS |
|---|---|---|---|---|---|---|---|---|---|---|---|---|---|---|
| 1 | 1 | 6'-0" | 7'-0" | 1 3/4" | GLASS | ALUM | ALUM | BRNZ | – | PANIC | 5/A102 | 6/A102 | 7/A102 | EXT. DOOR (W/CLOSER) |
| 2 | 3 | 3'-0" | 6'-8" | 1 3/4" | WOOD | PAINT | WOOD | PAINT | 20MIN | LEVER | 1/A102 | 2/A102 | 12/A102 | 20 MIN FIRE RATED W/CLOSER |
| 3 | 3 | 3'-0" | 6'-8" | 1 3/4" | WOOD | PAINT | WOOD | PAINT | 20MIN | LEVER | 1/A102 | 2/A102 | 12/A102 | 20 MIN FIRE RATED W/CLOSER |
| 4 | 3 | 3'-0" | 6'-8" | 1 3/4" | WOOD | PAINT | WOOD | PAINT | 20MIN | LEVER | 1/A102 | 2/A102 | 12/A102 | 20 MIN FIRE RATED W/CLOSER |
| 5 | 3 | 3'-0" | 6'-8" | 1 3/4" | WOOD | PAINT | WOOD | PAINT | 20MIN | LEVER | 1/A102 | 2/A102 | 12/A102 | 20 MIN FIRE RATED W/CLOSER |
| 6 | 4 | 6'-0" | 6'-8" | 1 3/4" | WOOD | PAINT | WOOD | PAINT | 20MIN | LEVER | 1/A102 | 2/A102 | 12/A102 | 20 MIN FIRE RATED W/CLOSER |
| 7 | 3 | 3'-0" | 6'-8" | 1 3/4" | WOOD | PAINT | WOOD | PAINT | – | LEVER | 1/A102 | 2/A102 | 12/A102 | 20 MIN FIRE RATED W/CLOSER |
| 8 | 3 | 3'-0" | 6'-8" | 1 3/4" | WOOD | PAINT | WOOD | PAINT | – | LEVER | 1/A102 | 2/A102 | 12/A102 | 20 MIN FIRE RATED W/CLOSER |
| 9 | 3 | 3'-0" | 6'-8" | 1 3/4" | WOOD | PAINT | WOOD | PAINT | – | LEVER | 1/A102 | 2/A102 | 12/A102 | 20 MIN FIRE RATED W/CLOSER |
| 10 | 3 | 3'-0" | 6'-8" | 1 3/4" | WOOD | PAINT | WOOD | PAINT | – | LEVER | 1/A102 | 2/A102 | 12/A102 | 20 MIN FIRE RATED W/CLOSER |
| 11 | 2 | 5'-0" | 7'-0" | 1 3/4" | METAL | PAINT | METAL | PAINT | – | PANIC | 5/A102 | 6/A102 | 7/A102 | EXT. DOOR (W/CLOSER) |
| 12 | 2 | 5'-0" | 7'-0" | 1 3/4" | METAL | PAINT | METAL | PAINT | – | PANIC | 5/A102 | 6/A102 | 7/A102 | EXT. DOOR (W/CLOSER) |
| 13 | 3 | 3'-0" | 6'-8" | 1 3/4" | WOOD | PAINT | WOOD | PAINT | 20MIN | LEVER | 1/A102 | 2/A102 | 12/A102 | 20 MIN FIRE RATED W/CLOSER |
| 14 | 3 | 3'-0" | 6'-8" | 1 3/4" | WOOD | PAINT | WOOD | PAINT | 20MIN | LEVER | 1/A102 | 2/A102 | 12/A102 | 20 MIN FIRE RATED W/CLOSER |
| 15 | 3 | 3'-0" | 6'-8" | 1 3/4" | WOOD | PAINT | WOOD | PAINT | 20MIN | LEVER | 1/A102 | 2/A102 | 12/A102 | 20 MIN FIRE RATED W/CLOSER |
| 16 | 3 | 3'-0" | 6'-8" | 1 3/4" | WOOD | PAINT | WOOD | PAINT | 20MIN | LEVER | 1/A102 | 2/A102 | 12/A102 | 20 MIN FIRE RATED W/CLOSER |
| 17 | 3 | 3'-0" | 6'-8" | 1 3/4" | WOOD | PAINT | WOOD | PAINT | 20MIN | LEVER | 1/A102 | 2/A102 | 12/A102 | 20 MIN FIRE RATED W/CLOSER |
| 18 | 3 | 3'-0" | 6'-8" | 1 3/4" | WOOD | PAINT | WOOD | PAINT | 20MIN | LEVER | 1/A102 | 2/A102 | 12/A102 | 20 MIN FIRE RATED W/CLOSER |
| 19 | 3 | 3'-0" | 6'-8" | 1 3/4" | WOOD | PAINT | WOOD | PAINT | 20MIN | LEVER | 1/A102 | 2/A102 | 12/A102 | 20 MIN FIRE RATED W/CLOSER |
| 20 | 3 | 3'-0" | 6'-8" | 1 3/4" | WOOD | PAINT | WOOD | PAINT | 20MIN | LEVER | 1/A102 | 2/A102 | 12/A102 | 20 MIN FIRE RATED W/CLOSER |
| 21 | 2 | 5'-0" | 7'-0" | 1 3/4" | METAL | PAINT | METAL | PAINT | – | LEVER | 5/A102 | 6/A102 | 7/A102 | EXT. DOOR (W/CLOSER) |

NOTES:
- FIELD VERIFY ALL DIMENSIONS.
- VERIFY DOOR JAMB THICKNESS AT EACH WALL TYPE
- REFER TO TYPICAL HEADER/SILL/JAMB DETAILS FOR ADDITIONAL REQUIREMENTS.

## WINDOW SCHEDULE

VYL = VINYL; HM = HOLLOW METAL; ALUM = ALUMINUM

| MARK | TYPE | MATERIAL | SIZE WIDTH | SIZE HEIGHT | DETAILS HEAD | DETAILS JAMB | DETAILS SILL | WINDOW NOTES |
|---|---|---|---|---|---|---|---|---|
| A | 2 | ALUM | 3'-0" | 5'-0" | 9/A103 | 10/A103 | 11/A103 | BRONZE ALUMINUM STOREFRONT FIXED |
| B | 2 | ALUM | 3'-0" | 3'-0" | 9/A103 | 10/A103 | 11/A103 | BRONZE ALUMINUM STOREFRONT FIXED |
| C | 2 | CASED | 6'-0" | 5'-0" | 1/A103 | 2/A103 | 3/A103 | WOOD CASED OPENING AROUND BAPTISTRY |

NOTES:
- FIELD VERIFY ALL DIMENSIONS.
- VERIFY JAMB THICKNESS AT EACH WALL TYPE
- REFER TO TYPICAL HEADER/SILL/JAMB DETAILS FOR ADDITIONAL REQUIREMENTS.

## DOOR NOTES:

1. ALL DOOR HARDWARE SHALL BE SINGLE-ACTION LEVER TYPE.
2. ALL DOOR CLOSERS SHALL COMPLY WITH ADA REQUIREMENTS.
3. ACCESS TO EXITS SHALL BE MARKED BY APPROVED SIGNS.
4. EMERGENCY LIGHTING FIXTURES SHALL BE INSTALLED AND ARRANGED SO THAT THE PATH OF TRAVEL IS ILLUMINATED BUT DOES NOT SHINE IN THE FACE OF PERSONS EXITING.
5. LOCKING DEVICES ON EXIT DOORS SHALL BE DIRECT ACTING REQUIRING NO MORE THAN A SINGLE MOTION PER NFPA 101.
6. EXIT DOORS SHALL NOT REQUIRE THE USE OF A KEY, TOOL, SPECIAL KNOWLEDGE OR EFFORT, FROM INSIDE THE BUILDING.
7. DOUBLE KEYED CYLINDER LOCKS ARE PROHIBITED.
8. ALL EMERGENCY DOORS TO HAVE SINGLE ACTION PANIC HARDWARE.
9. ALL INTERIOR DOORS (UNLESS OTHERWISE NOTED) SHALL BE SOLID CORE WOOD.
10. ALL DOORS TO BE KEYED ALIKE AS PER OWNER REQUIREMENTS.
11. PROVIDE DOOR STOPS WHERE REQUIRED. ALL EXTERIOR DOORS EXCEPT ROLL UP DOORS SHALL HAVE WEATHER STRIPPING. DOOR SWEEPS AND WEATHER STRIPS SHALL BE ADJUSTED TO MINIMIZE AIR FLOW.
12. CONTRACTOR SHALL COORDINATE WITH OWNER TO VERIFY ALL TRIM AND HARDWARE PRIOR TO CONSTRUCTION.

PRELIMINARY DOCUMENT
NOT INTENDED FOR CONSTRUCTION, BIDDING, SALES OR ISSUANCE OF A PERMIT

NOBLES & ASSOCIATES L.L.C.
PROFESSIONAL ENGINEERS, LAND SURVEYORS, & DESIGNERS
562 COLUMBIA STREET, BOGALUSA, LA. 70427 P: 985-723-0380
800 MARINERS PLAZA, SUITE 800, MANDEVILLE, LA. 70448 P: 985-727-7221

NEW BUILDING FOR
SUPERIOR AVENUE CHURCH
SANCTUARY
HIGHWAY 21, BOGALUSA, LA 70427

| Rev. No. | Date | Description |
|---|---|---|
| | | |

ENGINEER OF RECORD
NAME GEORGE NOBLES
NUMBER 31767

SCEDULES
DETAILS

Job No. E-00165
Dwn. SWL Chk. GBN
Date 01/25/2022 Rev. REV. 0

A103
Sheet 2 Of *

COPYRIGHT 2021 NOBLES & ASSOCIATES, L.L.C.
THESE DRAWINGS ARE THE SOLE PROPERTY OF NOBLES & ASSOCIATES, L.L.C., AND ARE ISSUED AS INSTRUMENTS OF SERVICE. THESE DRAWINGS SHALL NOT BE COPIED, REPRODUCED OR USED IN ANY MANNER WITHOUT WRITTEN CONSENT OF NOBLES & ASSOCIATES L.L.C.

REVISED: Z:\ENGINEERING\NEW JOBS\E-00165\Superior Avenue\DWG\Multipurpose

COPYRIGHT 2021 NOBLES & ASSOCIATES, L.L.C.

PRELIMINARY DOCUMENT
NOT INTENDED FOR CONSTRUCTION, BIDDING, SALES OR ISSUANCE OF A PERMIT

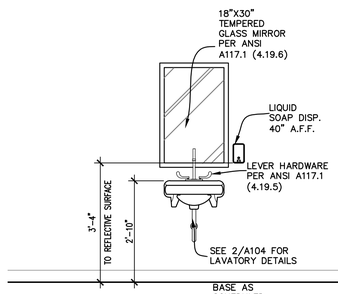


NOTE: REFERENCE DETAILS 8 THRU 11/A104 FOR ACCESSORY INSTALLATION DETAILS

A/A104 WEST ELEV. MEN
SCALE: 1/2"=1'

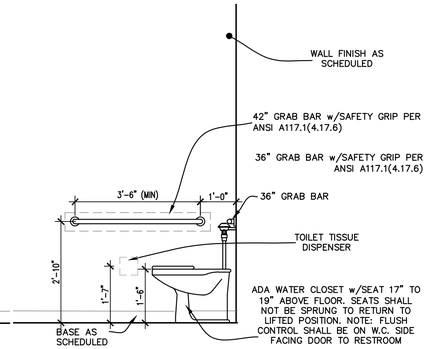


NOTES:
1. MEASUREMENTS SHOWN ARE FOR ADULT USAGE.
2. REFERENCE DETAILS 8 THRU 11/A104 FOR ACCESSORY INSTALLATION DETAILS.
3. SEE TABLE FOR CHILDREN'S USE REQUIREMENTS.

B/A104 SOUTH ELEV. MEN
SCALE: 1/2"=1'

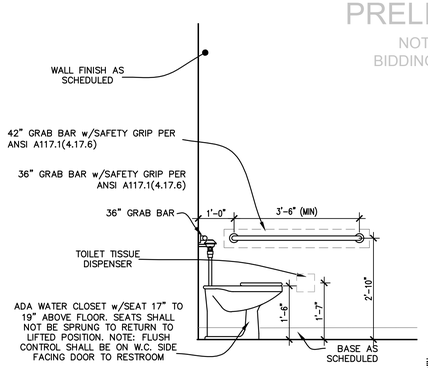


NOTES:
1. MEASUREMENTS SHOWN ARE FOR ADULT USAGE.
2. REFERENCE DETAILS 8 THRU 11/A104 FOR ACCESSORY INSTALLATION DETAILS.
3. SEE TABLE FOR CHILDREN'S USE REQUIREMENTS.

E/A104 SOUTH ELEV. WOMEN
SCALE: 1/2"=1'

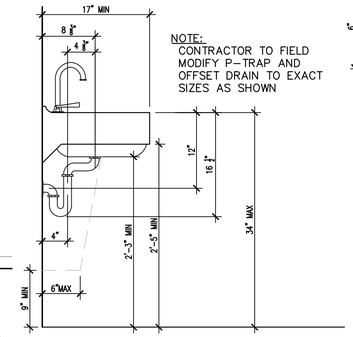


NOTE:
CONTRACTOR TO FIELD MODIFY P-TRAP AND OFFSET DRAIN TO EXACT SIZES AS SHOWN

2/A104 TYP ADA LAVATORY DETAILS
SCALE: NTS

NOTE:
1. SIGNAGE SHALL COMPLY WITH NFPA 101 AND ADA.

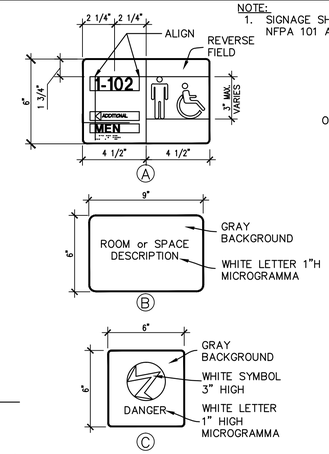


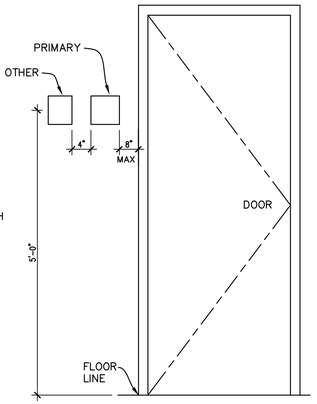


7/A104 TYP. HANDICAP SIGNAGE DETAIL
SCALE: NTS

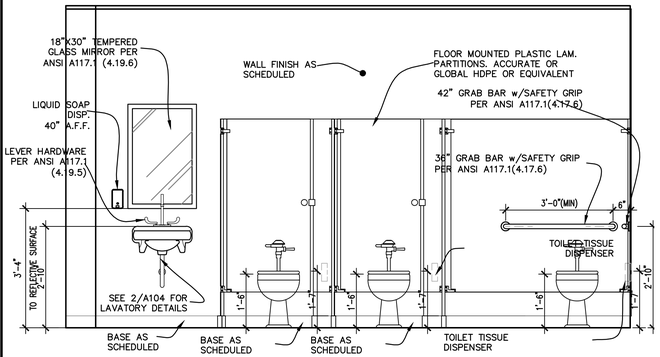


NOTE: REFERENCE DETAILS 8 THRU 11/A104 FOR ACCESSORY INSTALLATION DETAILS

C/A104 EAST ELEV. MEN
SCALE: 1/2"=1'

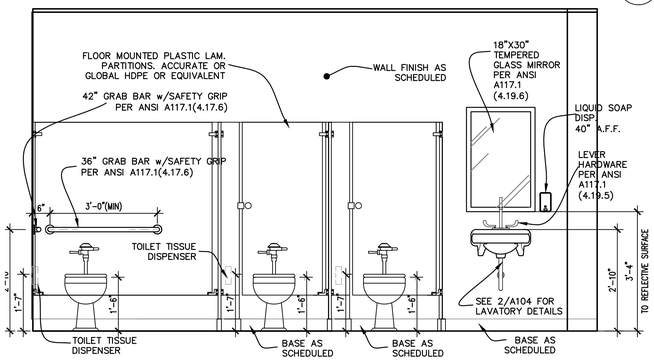


NOTE: REFERENCE DETAILS 8 THRU 11/A104 FOR ACCESSORY INSTALLATION DETAILS

D/A104 WEST ELEV. WOMEN
SCALE: 1/2"=1'

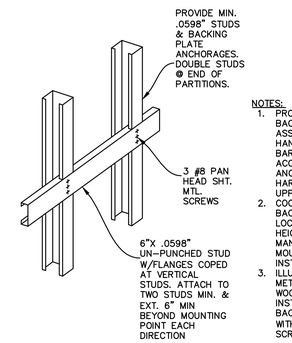


NOTES:
1. PROVIDE TYPICAL BACKING PLATE ASSEMBLY FOR HANDRAILS, GRAB BARS, TOILET ACCESSORY ANCHORAGE, DOOR HARDWARE, MILLWORK UPPER CABINETS.
2. COORDINATE BACKING PLATE LOCATION AND HEIGHTS WITH MANUFACTURER MOUNTING INSTRUCTIONS.
3. ILLUSTRATION FOR METAL FRAMING. WOOD FRAMING INSTALL MIN 2X8 BACKING PLATE WITH MIN (3) TORX SCREWS PER STUD

3/A104 TYPICAL BACKING PLATE DETAILS
SCALE: NTS

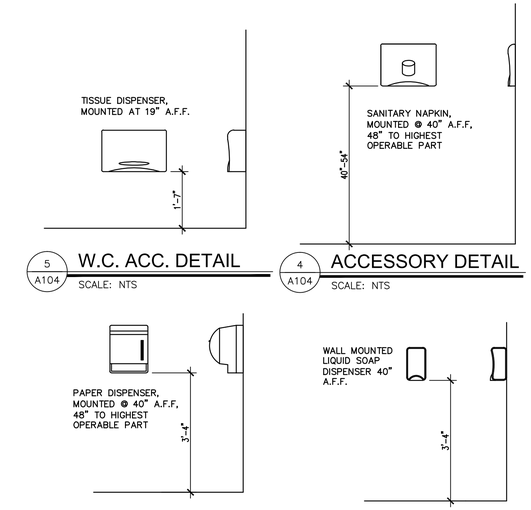


5/A104 W.C. ACC. DETAIL
SCALE: NTS

4/A104 ACCESSORY DETAIL
SCALE: NTS

8/A104 W.C. ACC. DETAIL
SCALE: NTS

9/A104 W.C. ACC. DETAIL
SCALE: NTS

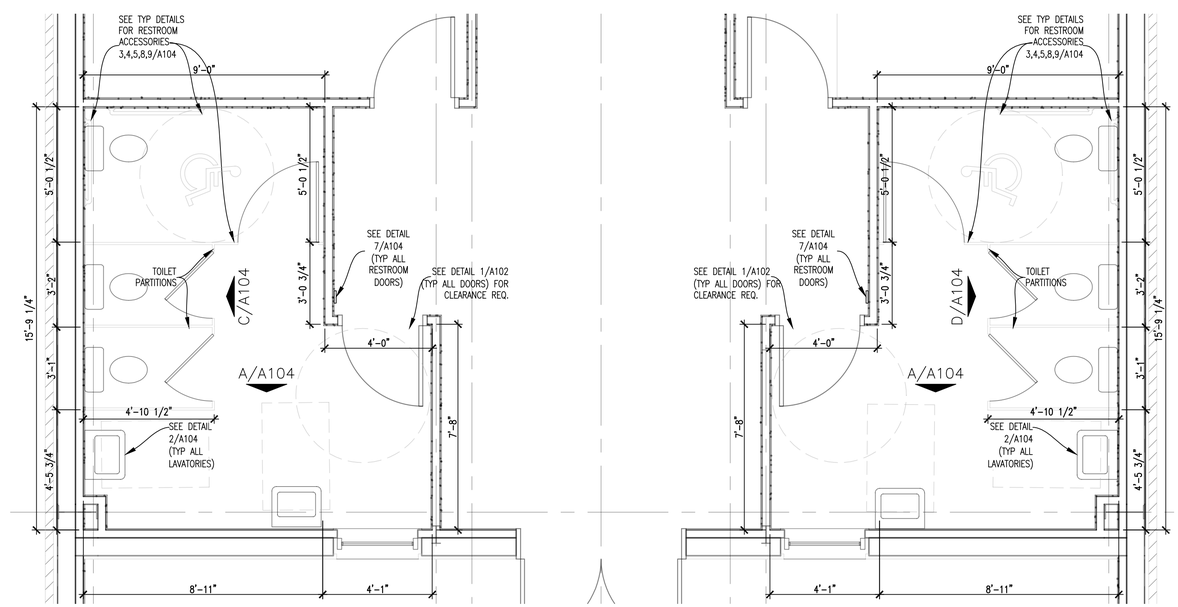


1/A104 ENLARGED BATHROOM FLOORPLAN
SCALE: 3/8"=1'

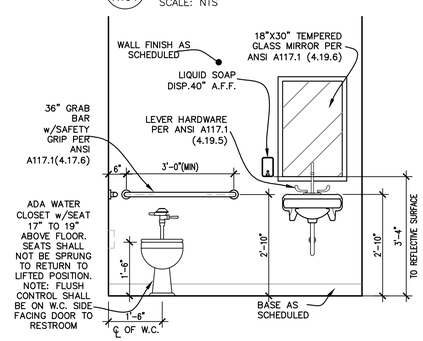


F/A104 ENLARGED BATHROOM FLOORPLAN
SCALE: 3/8"=1'

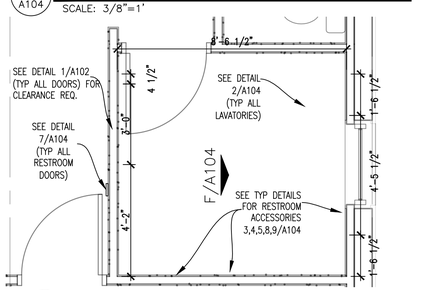


10/A104 ENLARGED BATHROOM FLOORPLAN
SCALE: 3/8"=1'

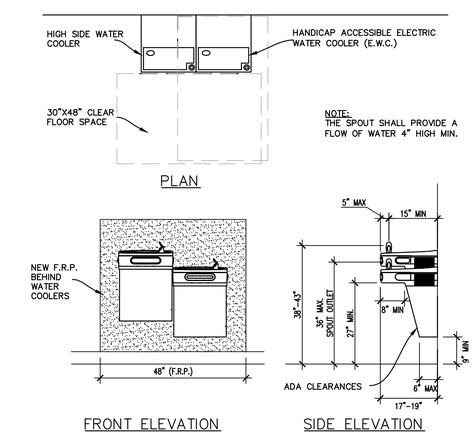


NOTE:
THE SPOUT SHALL PROVIDE A FLOW OF WATER 4" HIGH MIN.

6/A104 TYP. HANDICAP DRINKING FOUNTAIN
SCALE: NTS

NOBLES & ASSOCIATES L.L.C.
PROFESSIONAL ENGINEERS, LAND SURVEYORS, & DESIGNERS
562 COLUMBIA STREET, BOGALUSA, LA. 70427 P: 985-723-0380
800 MARINERS PLAZA, SUITE 800, MANDEVILLE, LA. 70448 P: 985-727-7221

NEW BUILDING FOR
# SUPERIOR AVENUE CHURCH
SANCTUARY
HIGHWAY 21, BOGALUSA, LA 70427

| Rev. No. | Date | Description |
|---|---|---|
| | | |

ENGINEER OF RECORD
NAME GEORGE NOBLES
NUMBER 31767

DETAILS
RESTROOM PLAN

Job No. E-00165
Dwn. SWL Chk. GBN
Date 01/25/2022 Rev. REV. 0

A104
Sheet 3 Of *

THESE DRAWINGS ARE THE SOLE PROPERTY OF NOBLES & ASSOCIATES L.L.C., AND ARE ISSUED AS INSTRUMENTS OF SERVICE. THESE DRAWINGS SHALL NOT BE COPIED, REPRODUCED OR USED IN ANY MANNER WITHOUT WRITTEN CONSENT OF NOBLES & ASSOCIATES L.L.C.

REVISED: Z:\ENGINEERING\NEW JOBS\E-00165\Superior Avenue Church\DWG\A104.dwg

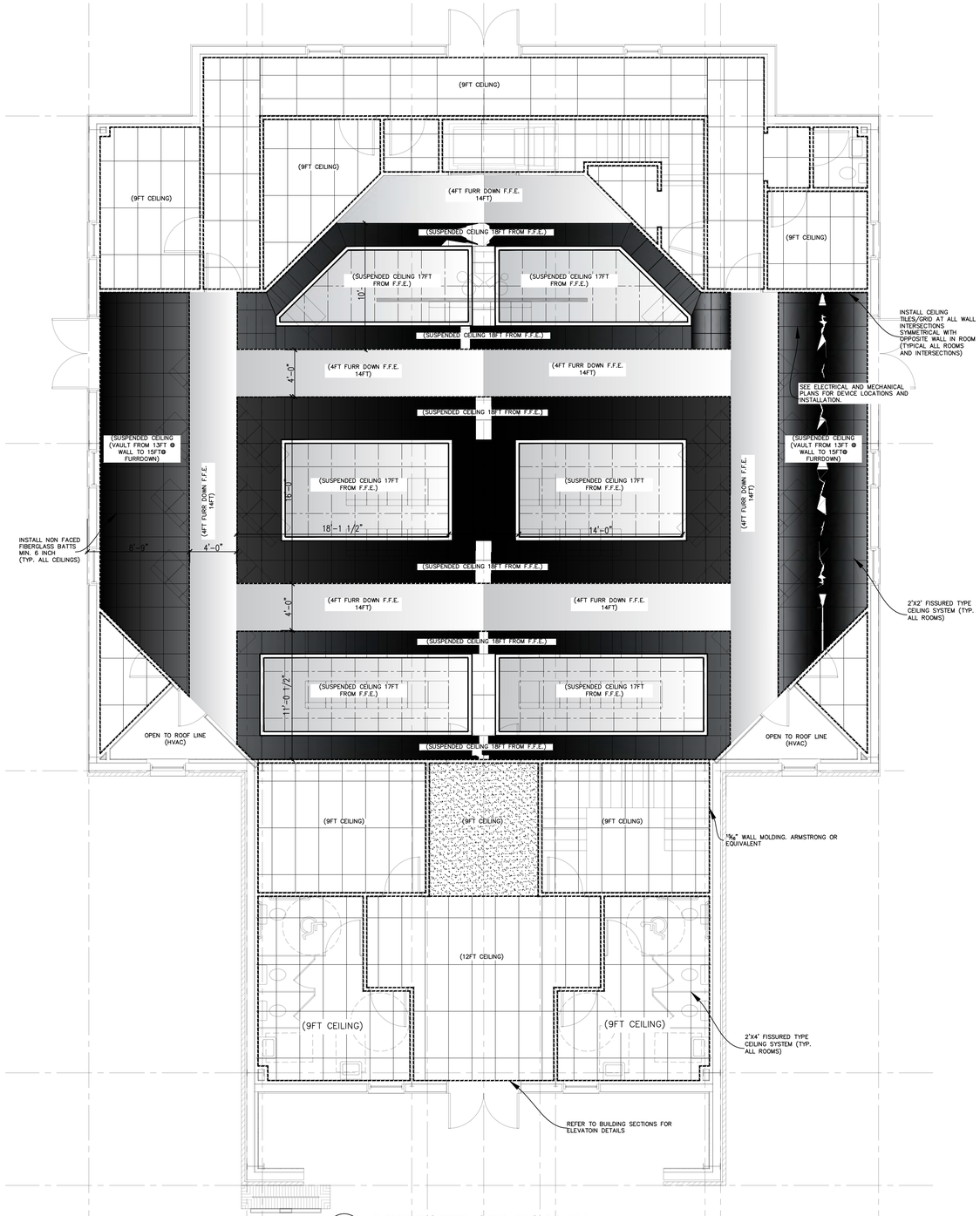


1 / A105 REFLECTED CEILING PLAN

SCALE: 3/16"=1'

## CEILING SYSTEM NOTES:

1. ALL FASTENERS FOR CEILING SYSTEM TO BE AS PER MANUFACTURER'S RECOMMENDATIONS.
2. CONTRACTOR SHALL VERIFY FINISHED CEILING HEIGHTS PRIOR TO INSTALLATION. THE ENGINEER SHALL BE NOTIFIED OF ANY DISCREPANCIES BEFORE INSTALLATION OR CONTRACTOR WILL BE RESPONSIBLE FOR ANY CHANGES.
3. ALL ROOMS TO HAVE MIN. 6 IN. NON FACED FIBERGLASS BATT INSULATION INSTALLED ABOVE SUSPENDED TILE SYSTEM.
4. CONTRACTOR TO INSTALL TILE HOLD DOWN CLIPS IF REQUIRED.

CEILING 1 – 5/8" DRYWALL WITH LEVEL 3 LIGHT TEXTURE ATTACHED TO METAL STUD FURR DOWN SUSPENDED FROM CEILING W/18GA. METAL STUDS. SEE DETAIL

CEILING 2 – 2x4 WHITE SMOOTH DRYWALL FINISH ARMSTRONG OR EQUIVLAENT SUSPENDED CEILING GRID AND TILES

CEILING 3 – 2X2 ARMSTRONG OR EQUIVLAENT SUSPENDED CEILING BLACK GRID AND BLACK TEGULAR TILES

PRELIMINARY DOCUMENT

NOT INTENDED FOR CONSTRUCTION, BIDDING, SALES OR ISSUANCE OF A PERMIT

NOBLES & ASSOCIATES L.L.C.
PROFESSIONAL ENGINEERS, LAND SURVEYORS, & DESIGNERS
562 COLUMBIA STREET, BOGALUSA, LA. 70427 P: 985-723-0380
800 MARINER'S PLAZA, SUITE 808, MANDEVILLE, LA. 70448 P: 985-727-7221

NEW BUILDING FOR

SUPERIOR AVENUE CHURCH

SANCTUARY

HIGHWAY 21, BOGALUSA, LA 70427

| Rev. No. | Date | Description |
|---|---|---|
| | | |

ENGINEER OF RECORD
NAME GEORGE NOBLES
NUMBER 31767

REFLECTED CEILING PLAN DETAILS

Job No. E-00165

Dwn. SWL Chk. GBN
Date 01/25/2022 Rev. REV. 0

A105
Sheet 4 Of *

COPYRIGHT 2021 NOBLES & ASSOCIATES, L.L.C.
REVISED: Z:\ENGINEERING\NEW JOBS\E-00165\Superior Avenue Church\DWG\MAIN\Purpose
THESE DRAWINGS ARE THE SOLE PROPERTY OF NOBLES & ASSOCIATES L.L.C., AND ARE ISSUED AS INSTRUMENTS OF SERVICE. THESE DRAWINGS SHALL NOT BE COPIED, REPRODUCED OR USED IN ANY MANNER WITHOUT WRITTEN CONSENT OF NOBLES & ASSOCIATES L.L.C.

COPYRIGHT 2021 NOBLES & ASSOCIATES, L.L.C.

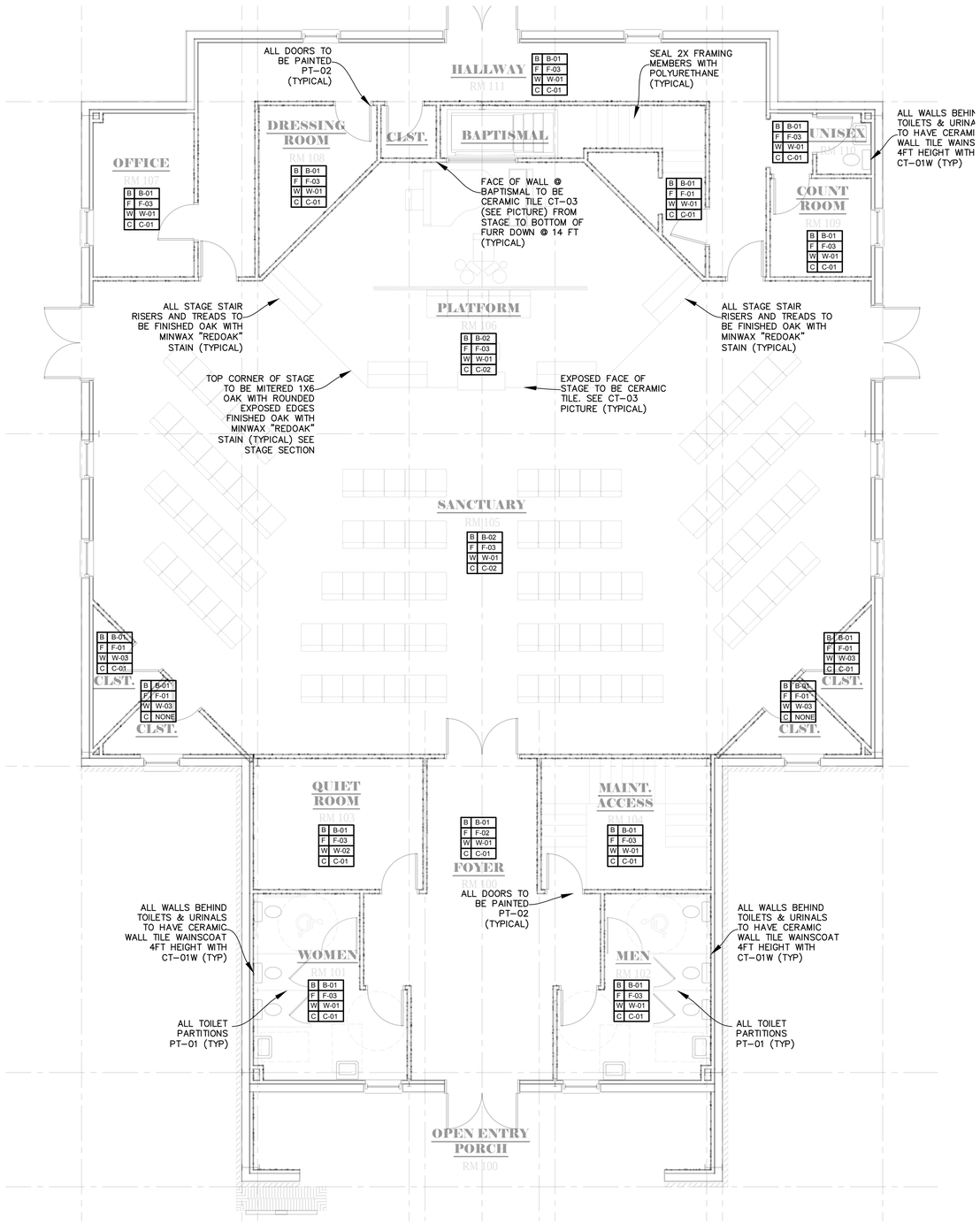


1 A105 FINISH SCHEDULE

SCALE: 3/16"=1'

B — BASE FINISH
F — FLOOR FINISH
W — WALL FINISH
C — CEILING FINISH

## FINISH NOTES

1. ALL NEW CONSTRUCTION SHALL COMPLY WITH FEDERAL, STATE AND LOCAL CODES.
2. NEW FLOORING AND TRANSITIONS SHALL MATCH EXISTING WITH SEAMLESS INTEGRATION.
3. MATCH HEIGHT, COLOR, STYLE AND CHARACTER OF EXISTING.

## FINISH SCHEDULE

| | |
|---|---|
| **B-WALL BASE** | |
| B-01 | Wall base Rooms 100 thru 104 and 107 thru 111 |
| | Mfr/Source: Roppe |
| | Product: 4" x 1/8" vinyl wall cove base |
| | Finish: Standard |
| | Thickness: 3.175 mm |
| | Color: White |
| B-02 | Wall base Rooms 105 and 106 |
| | Mfr/Source: MDF or Wood |
| | Product: 5 1/4" Colonial Primed Base |
| | Finish: PT-02 |
| | |
| **F - FLOORING** | |
| F-01 | Concrete @ Clsts and Baptismal |
| | Mfr/Source: Concrete Manufacturer |
| | Product: Concrete |
| | Color: None |
| | Finish: PSV 700 gloss clear epoxy |
| | Contact: PPG |
| | Installation: |
| F-02 | Ceramic Room 100 |
| | Mfr/Source: Happy Floors |
| | Product: Eternity 12x24 |
| | Color: Black |
| | Size: 12x24 |
| | Thickness: Varies |
| | Finish: Porcelain |
| | Grout Mfr.: |
| | Grout Color: |
| | Grout Joint: |
| | Slip Resistance: >0.42 DCOF |
| | Contact: Pro Source |
| | Installation: |
| F-03 | LVP Rooms 100 thru 105 and 107 thru 111 |
| | Mfr/Source: Biolick Distributors |
| | Product: Glue Down LVP |
| | Series: Armada Basin LVP |
| | Size: 7 x 48 |
| | Thickness: 2.5 mm with 20mil wear layer |
| | Color: Natural Wood |
| | Contact: 225-927-8016 |
| | Installation: |
| | |
| **W-WALL SYSTEM** | |
| W-01 | Wall systems Rooms 100 thru 102 and 104 thru 111 |
| | Wall Type: Metal Stud or Wood Stud - See Sections & Details |
| | Interior Wall Finish: 5/8" drywall Level 3 finish light orange peel |
| | Wall Paint Color: PT-01 |
| W-02 | Wall systems Rooms 103 |
| | Wall Type: Metal Stud or Wood Stud - See Sections & Details |
| | Interior Wall Finish: Level 3 finish light orange peel installed over R-13 wall insulation and two layers of 5/8" Soundbreak XP wall board with joints staggered |
| | Wall Paint Color: PT-01 |
| W-03 | Wall systems Rooms Clsts (HVAC) |
| | Wall Type: Metal Stud or Wood Stud - See Sections & Details |
| | Interior Wall Finish: Hang, tape and float one layer of 5/8" Soundbreak XP wall board to seal HVAC closet area and plenum |
| | Wall Paint Color: N/A |
| | |
| **C-CEILING SYSTEM** | |
| C-01 | Ceiling Systems in Rooms 102 thru 105 |
| | Mfr/Source: Armstrong |
| | Product: CIRRUS: A584 |
| | Color: White |
| | Type: Tegular Fine Fissured |
| | Size: 2'x2' |
| | Contact: Inex, Mandeville, La |
| | Ph/Email: 985-809-7069 |
| | Note: |
| C-02 | Ceiling Systems Rooms 105 and 106 |
| | Ceiling Type: 2x2 suspended system and 2x4 framed furr down |
| | Ceiling Finish @ Furr Downs: See A105 for ceiling layout. All furr down to be metal stud with 5/8" drywall Level 3 light orange peel finish with PT-01 paint |
| | Ceiling Finish @ Suspended Ceiling Areas: See A105 for ceiling layout. All areas of suspsended ceiling to be Armstrong Cirrus A584 or equivalent Tegular Fine Fissures BLACK with BLACK grid |
| | Note: |
| | |
| **CT - CERAMIC TILE** | |
| CT-01W | Behind Toilet Areas min 4ft x 4ft |
| | Mfr/Source: Happy Floors |
| | Product: Eternity 12x24 |
| | Color: Black |
| | Size: 12x24 |
| | Thickness: Varies |
| | Finish: Porcelain |
| | Grout Mfr.: |
| | Grout Color: |
| | Grout Joint: |
| | Slip Resistance: >0.42 DCOF |
| | Contact: Pro Source |
| | Installation: |
| | |
| **PT -PAINT** | |
| PT-01 | Typical Wall Paint |
| | Mfr/Source: PPG |
| | Color: Go To Gray PPG1004-1 |
| | Finish: Eggshell |
| PT-02 | Typical Trim Paint |
| | Mfr/Source: PPG |
| | Color: Commercial White PPG1025-1 |
| | Finish: Semi-gloss |
| | |
| **TP - TOILET PARTITIONS** | |
| TP-01 | Toilet Paritions Rooms 102 and 103 |
| | Mfr/Source: Global or Equivalent |
| | Color: 9200 Gray |
| | Finish: HDPE/Solid Polymer |
| | Type: Floor Mounted/Overhead Braced/Free Standing |
| | Contact: All Paritiitions 866-255-8645 |
| | |

PRELIMINARY DOCUMENT

NOT INTENDED FOR CONSTRUCTION, BIDDING, SALES OR ISSUANCE OF A PERMIT

NOBLES & ASSOCIATES L.L.C.
PROFESSIONAL ENGINEERS, LAND SURVEYORS, & DESIGNERS
562 COLUMBIA STREET, BOGALUSA, LA. 70427 P: 985-723-0380
800 MARINER'S PLAZA, SUITE 800, MANDEVILLE, LA. 70448 P: 985-727-7221

NEW BUILDING FOR

# SUPERIOR AVENUE CHURCH

SANCTUARY

HIGHWAY 21, BOGALUSA, LA 70427

| Rev. No. | Date | Description |
|---|---|---|
| | | |

ENGINEER OF RECORD
NAME GEORGE NOBLES
NUMBER 31787

FINISH SCHEDULE

Job No. E-00165

Dwn. SWL | Chk. GBN

Date 01/25/2022 | Rev. REV. 0

Sheet A106 Of *

THESE DRAWINGS ARE THE SOLE PROPERTY OF NOBLES & ASSOCIATES L.L.C., AND ARE ISSUED AS INSTRUMENTS OF SERVICE. THESE DRAWINGS SHALL NOT BE COPIED, REPRODUCED OR USED IN ANY MANNER WITHOUT WRITTEN CONSENT OF NOBLES & ASSOCIATES L.L.C.

REVISED: Z:\ENGINEERING\NEW JOBS\E-00165\Superior Avenue Church\DWG\Wall\Barpose

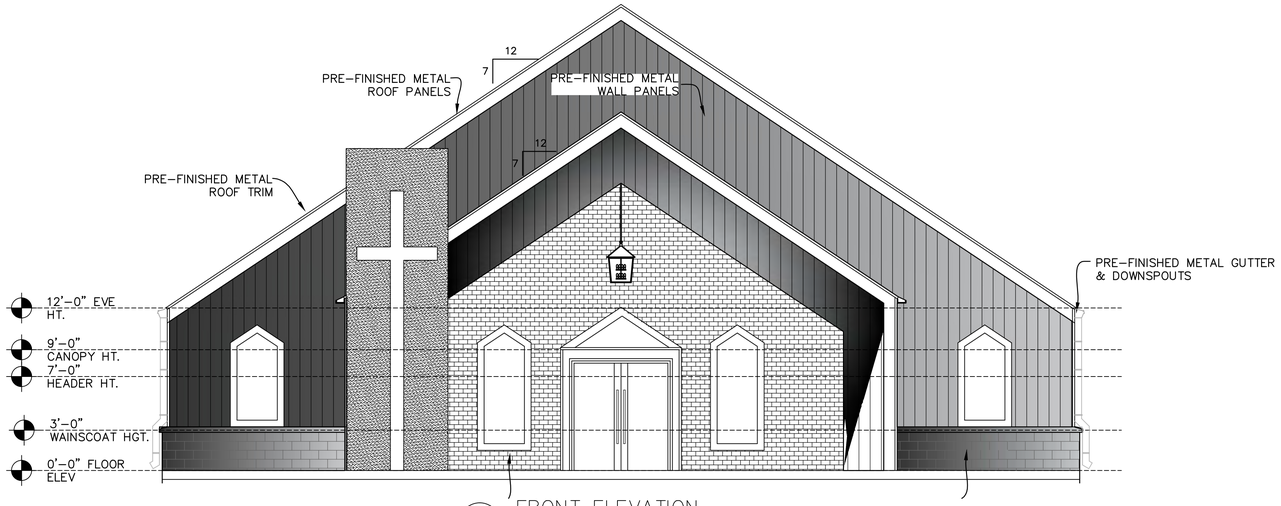


1 A201 FRONT ELEVATION

SCALE: 3/16" = 1'-0"

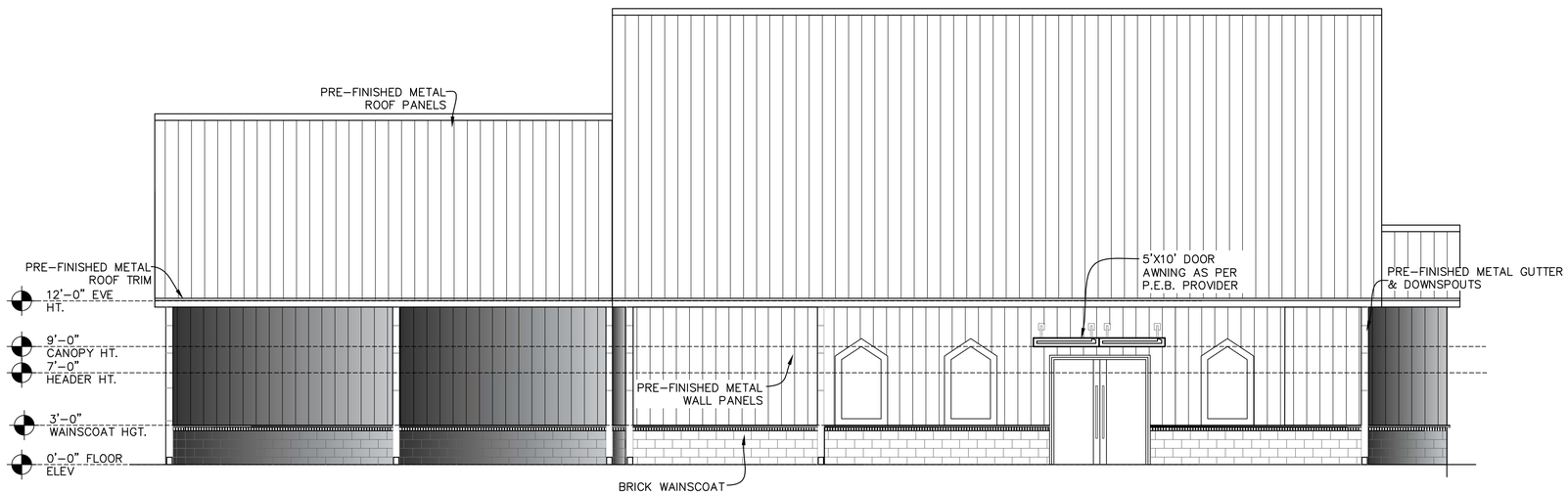


2 A201 REAR ELEVATION

SCALE: 3/16" = 1'-0"

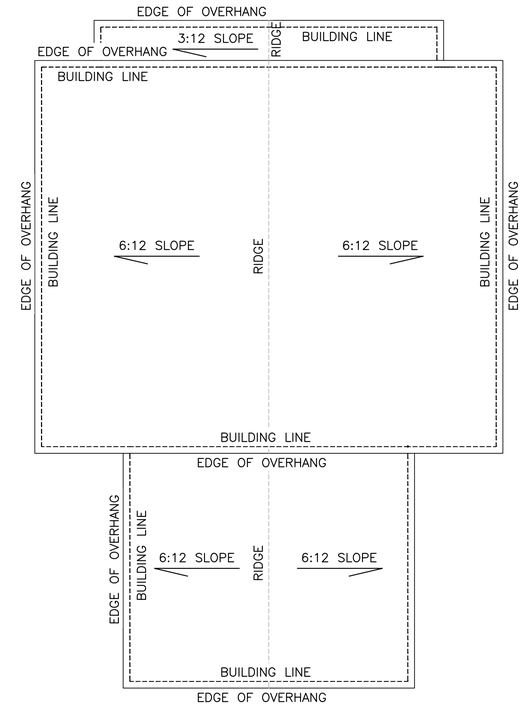


3 A201 ROOF PLAN

SCALE: 3/32" = 1'-0"

PRELIMINARY DOCUMENT

NOT INTENDED FOR CONSTRUCTION,
BIDDING, SALES OR ISSUANCE OF A PERMIT

NOBLES & ASSOCIATES L.L.C.
PROFESSIONAL ENGINEERS, LAND SURVEYORS, & DESIGNERS
562 COLUMBIA STREET, BOGALUSA, LA. 70427 P: 985-723-0380
800 MARINERS PLAZA, SUITE 808, MANDEVILLE, LA. 70448 P: 985-727-7221

NEW BUILDING FOR

# SUPERIOR AVENUE CHURCH

SANCTUARY

HIGHWAY 21, BOGALUSA, LA 70427

| Rev. No. | Date | Description |
|---|---|---|
| | | |

ENGINEER OF RECORD
NAME GEORGE NOBLES
NUMBER 31787

Job No. E-00165

Dwn. SWL Chk. GBN
Date 01/25/2022 Rev. REV. 0

Sheet 1 Of *

COPYRIGHT 2021 NOBLES & ASSOCIATES, L.L.C.

THESE DRAWINGS ARE THE SOLE PROPERTY OF NOBLES & ASSOCIATES L.L.C., AND ARE ISSUED AS INSTRUMENTS OF SERVICE. THESE DRAWINGS SHALL NOT BE COPIED, REPRODUCED OR USED IN ANY MANNER WITHOUT WRITTEN CONSENT OF NOBLES & ASSOCIATES L.L.C.

REVISED: Z:\ENGINEERING\NEW JOBS\E-00165\Superior Avenue Church\DWG\Multipurpose

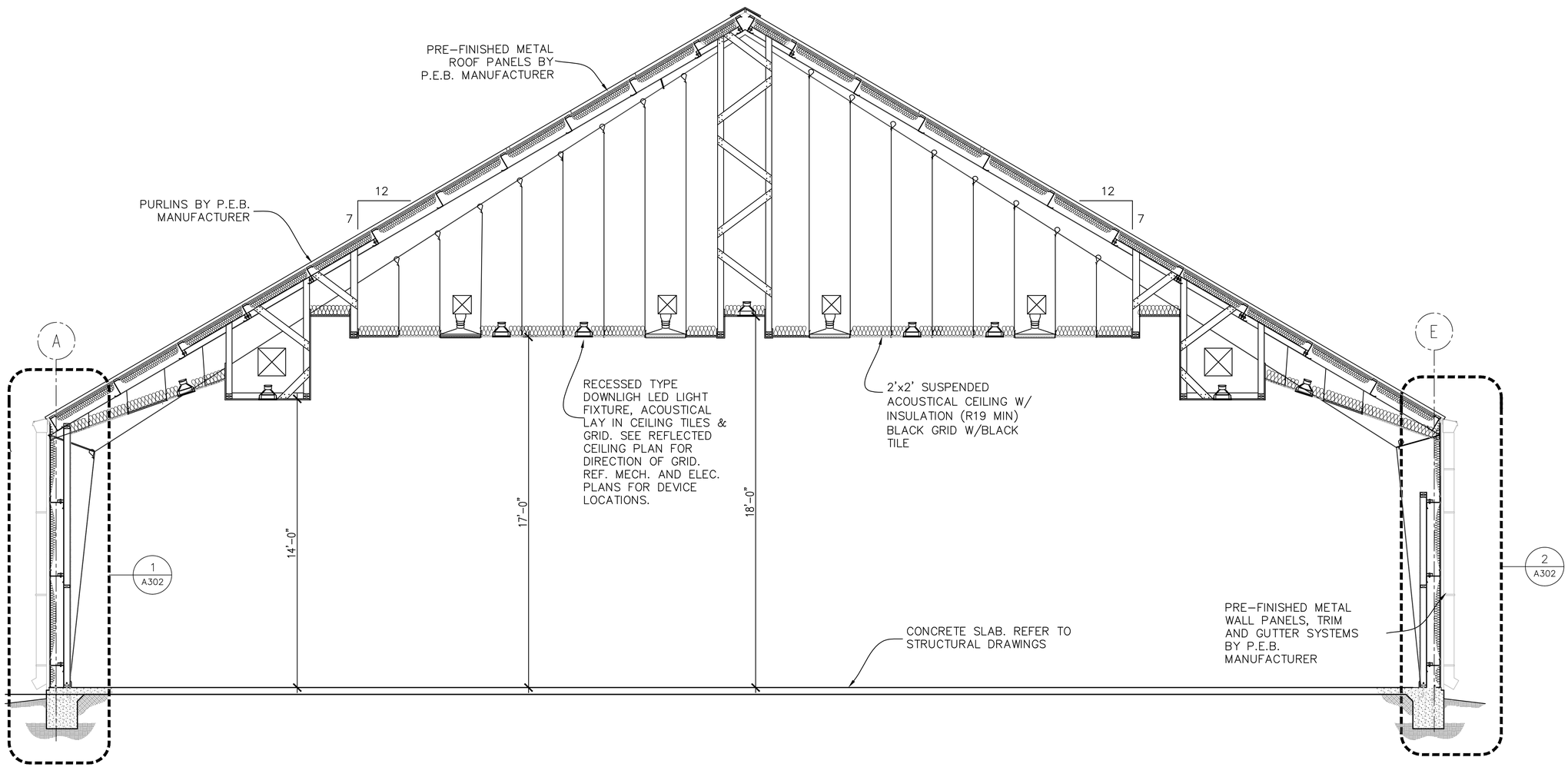


1 A301 **BUILDING SECTION**

SCALE: 1/4" = 1'-0"

PRELIMINARY DOCUMENT

NOT INTENDED FOR CONSTRUCTION, BIDDING, SALES OR ISSUANCE OF A PERMIT

NOBLES & ASSOCIATES L.L.C.
PROFESSIONAL ENGINEERS, LAND SURVEYORS, & DESIGNERS
562 COLUMBIA STREET, BOGALUSA, LA. 70427 P: 985-723-0380
800 MARINERS PLAZA, SUITE 808, MANDEVILLE, LA. 70448 P: 985-727-7221

NEW BUILDING FOR

# SUPERIOR AVENUE CHURCH

EDUCATIONAL BUILDING

HIGHWAY 21, BOGALUSA, LA 70427

| Rev. No. | Date | Description |
|---|---|---|
| | | |

ENGINEER OF RECORD
NAME GEORGE NOBLES
NUMBER 31787

BUILDING SECTIONS

| | |
|---|---|
| Job No. | E-00165 |
| Dwn. SWL | Chk. GBN |
| Date 01/25/2022 | Rev. REV. 0 |

A301
Sheet 1 Of *

COPYRIGHT 2021 NOBLES & ASSOCIATES, L.L.C.

THESE DRAWINGS ARE THE SOLE PROPERTY OF NOBLES & ASSOCIATES, L.L.C., AND ARE ISSUED AS INSTRUMENTS OF SERVICE. THESE DRAWINGS SHALL NOT BE COPIED, REPRODUCED OR USED IN ANY MANNER WITHOUT WRITTEN CONSENT OF NOBLES & ASSOCIATES, L.L.C.

REVISED: Z:\ENGINEERING\NEW JOBS\E-00165\Superior Avenue Church\DWG\Additional

COPYRIGHT 2021 NOBLES & ASSOCIATES, L.L.C.

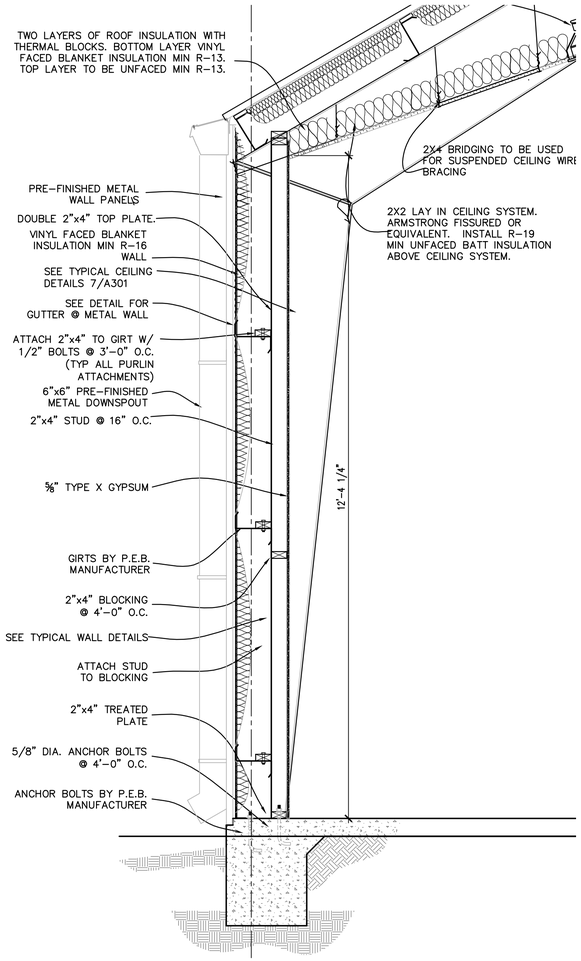


1 A302 WALL SECTION @ EXTERIOR

SCALE: 3/4" = 1'-0"

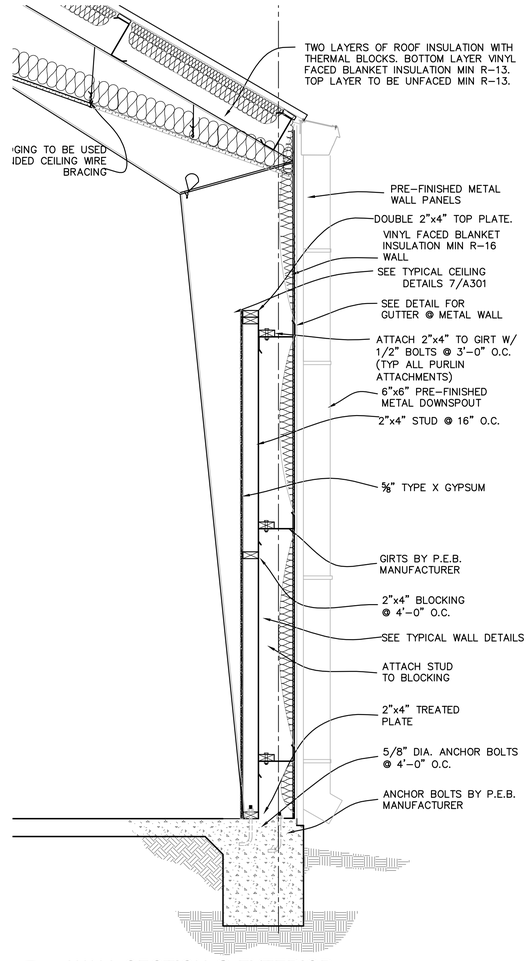


2 A302 WALL SECTION @ EXTERIOR

SCALE: 3/4" = 1'-0"

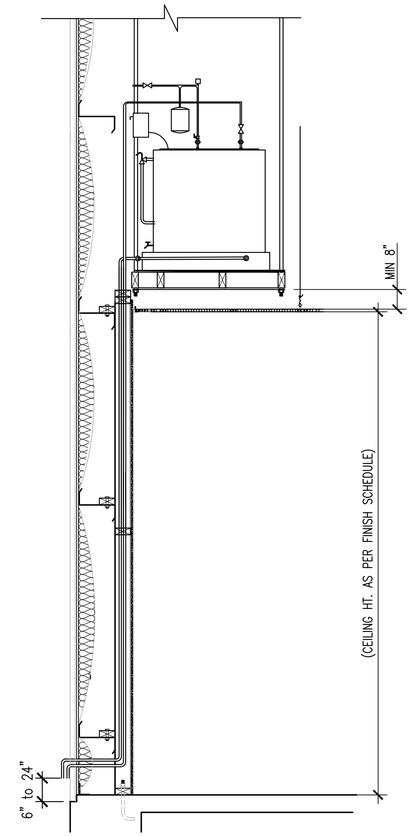


8 A302 TYPICAL WATER HEATER INSTALLATION

SCALE: 3/4" = 1'-0"

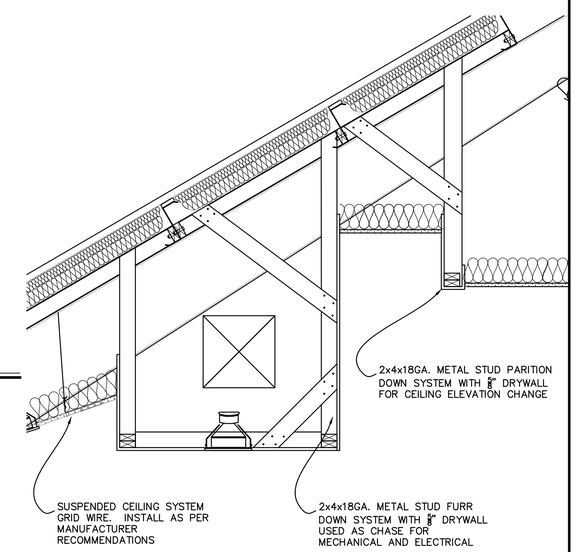


3 A302 WALL SECTION @ HALLWAY (TYP)

SCALE: 3/4" = 1'-0"

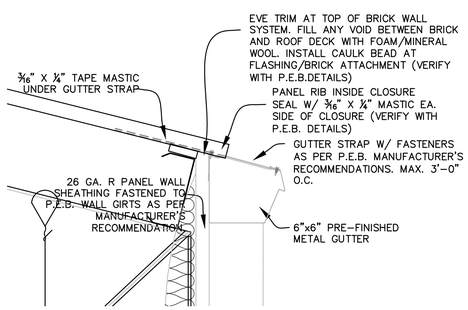


4 A302 EVE GUTTER DETAIL @ METAL WALL PANELS

SCALE: 1 1/2" = 1'-0"

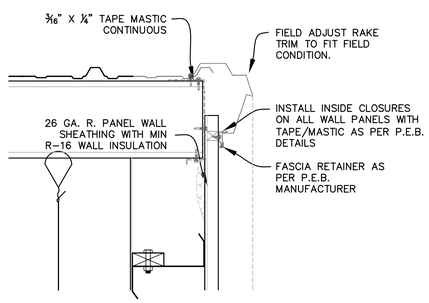


5 A302 RAKE TRIM DETAIL

SCALE: 1 1/2" = 1'-0"

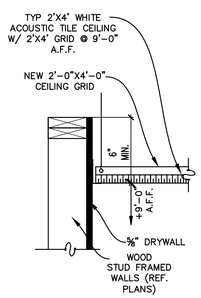


7 A302 CEILING GRID @ EXT. PENETRATING WALLS

SCALE: NTS

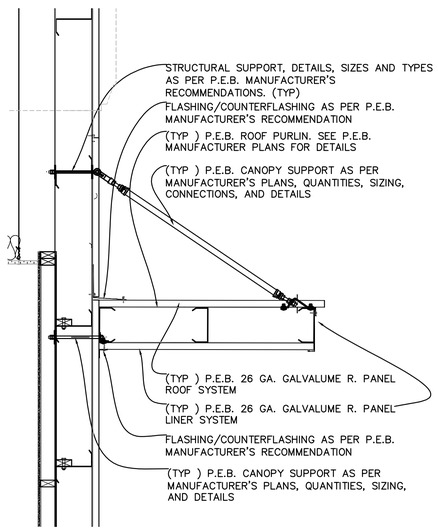


6 A302 TYPICAL DOOR AWNING DETAIL

SCALE: 3/4" = 1'-0"

PRELIMINARY DOCUMENT

NOT INTENDED FOR CONSTRUCTION, BIDDING, SALES OR ISSUANCE OF A PERMIT

NOBLES & ASSOCIATES L.L.C.
PROFESSIONAL ENGINEERS, LAND SURVEYORS, & DESIGNERS
562 COLUMBIA STREET, BOGALUSA, LA. 70427 P: 985-723-0380
800 MARINERS PLAZA, SUITE 808, MANDEVILLE, LA. 70448 P: 985-727-7221

NEW BUILDING FOR

# SUPERIOR AVENUE CHURCH

EDUCATIONAL BUILDING

HIGHWAY 21, BOGALUSA, LA 70427

| Rev. No. | Date | Description |
|---|---|---|
| | | |

ENGINEER OF RECORD
NAME GEORGE NOBLES
NUMBER 31767

BUILDING SECTIONS

Job No. E-00165

| Dwn. | Chk. |
|---|---|
| SWL | GBN |
| Date | Rev. |
| 01/25/2022 | REV. 0 |

A302

Sheet 1 Of *

THESE DRAWINGS ARE THE SOLE PROPERTY OF NOBLES & ASSOCIATES L.L.C., AND ARE ISSUED AS INSTRUMENTS OF SERVICE. THESE DRAWINGS SHALL NOT BE COPIED, REPRODUCED OR USED IN ANY MANNER WITHOUT WRITTEN CONSENT OF NOBLES & ASSOCIATES L.L.C.

REVISED: Z:\ENGINEERING\NEW JOBS\E-00165\Superior Avenue Church\DWG\E-A302.dwg

COPYRIGHT 2021 NOBLES & ASSOCIATES, L.L.C.

## GENERAL NAILING SCHEDULE

| JOINT DESCRIPTION | NUMBER OF COMMON NAILS | NUMBER OF BOX NAILS | NAIL SPACING |
|---|---|---|---|
| **ROOF FRAMING** | | | |
| BLOCKING TO RAFTER (TOE NAILED) | 2–8d | 2–10d | EACH END |
| RIM BOARD TO RAFTER (END NAILED) | 2–16d | 3–16d | EACH END |
| **WALL FRAMING** | | | |
| TOP PLATES AT INTERSECTIONS (FACE–NAILED) | 4–16d | 5–16d | AT JOINTS |
| STUD TO STUD (FACE–NAILED) | 2–16d | 2–16d | 24" O.C. |
| HEADER TO HEADER (FACE–NAILED) | 16d | 16d | 16" O.C. ALONG EDGES |
| **FLOOR FRAMING** | | | |
| JOIST TO SILL, TOP PLATE OR GIRDER (TOE–NAILED) | 4–8d | 4–10d | EACH END |
| BLOCKING TO JOIST (TOE–NAILED) | 2–8d | 2–10d | EACH END |
| BLOCKING TO SIOL OR TOP PLATE (TOE–NAILED) | 3–16d | 4–16d | EACH BLOCK |
| LEDGER STRIP TO BEAM OR GIRDER (FACE–NAILED) | 3–16d | 4–16d | EACH END |
| JOIST ON LEDGER TO BEAM (TOE–NAILED) | 3–8d | 3–10d | EACH END |
| BAND JOIST TO JOIST (END–NAILED) | 3–16d | 4–16d | EACH BLOCK |
| BAND JOIST TO SILL OR TOP PLATE (TOE–NAILED) | 2–16d | 3–16d | EACH BLOCK |
| **ROOF SHEATHING - WOOD STRUCTURAL PANELS (WSP)** | | | |
| RAFTERS OR TRUSSES SPACED UP TO 16" O.C. | 8d | 10d | 6" EDGE / 6" FIELD |
| RAFTERS OR TRUSSES SPACED OVER 16" O.C. | 8d | 10d | 4" EDGE / 4" FIELD |
| GABLE ENDWALL RAKE OR RAKE TRUSS W/O GABLE OVERHANG | 8d | 10d | 6" EDGE / 6" FIELD |
| GABLE ENDWALL RAKE OR RAKE TRUSS W/ STRUCTURAL OUTLOOKERS | 8d | 10d | 4" EDGE / 4" FIELD |
| GABLE ENDWALL RAKE TRUSS W/ LOOKOUT BLOCKS | 8d | 10d | 4" EDGE / 4" FIELD |
| **CEILING SHEATHING** | | | |
| GYPSUM WALLBOARD | 5d COOLERS | – | 7" EDGE / 10" FIELD |
| **WALL SHEATHING** | | | |
| (WSP) – STUDS SPACED UP TO 24" O.C. | 8d | 10d | 6" EDGE / 12" FIELD |
| 1/2" AND 25/32" FIBERBOARD PANELS | 8d[1] | – | 3" EDGE / 6" FIELD |
| 1/2" GYPSUM WALLBOARD | 5d COOLERS | – | 7" EDGE / 10" FIELD |
| **FLOOR SHEATHING - (WSP)** | | | |
| 1" OR LESS | 8d | 10d | 6" EDGE / 12" FIELD |
| GREATER THAN 1" | 10d | 16d | 6" EDGE / 6" FIELD |

[1] CORROSION RESISTANT 11 GAGE ROOFING NAILS AND 16 GAGE STAPLES ARE PERMITTED, CHECK IBC FOR ADDITIONAL REQUIREMENTS.
** UNLESS OTHERWSE STATED, SIZES GIVEN FOR NAILS ARE COMMON WIRE SIZES. BOX AND PNEUMATIC NAILS OF EQUIVALENT DIAMETER AND EQUAL OR GREATER LENGTH TO THE SPECIFIED COMMON NAILS MAY BE SUBSTITUTED UNLESS OTHERWSE PROHIBITED.

PRELIMINARY DOCUMENT
NOT INTENDED FOR CONSTRUCTION,
BIDDING, SALES OR ISSUANCE OF A PERMIT

## EXTERIOR LOAD BEARING HEADER SPAN WIND REQUIREMENT
(APPLIES TO INTERIOR SHEARWALL HEADER SPANS ALSO)

| HEADER SPAN | MEMBER | FASTENER REQUIREMENTS | LOCATION & WIND RATING | JACK STUDS 16" O.C. |
|---|---|---|---|---|
| 2' | (2) 2x4 | 16d COMMON MINIMUM 6 EACH END | EXTERIOR LOAD BEARING 130 MPH | 1 |
| 4' | (2) 2x6 | 16d COMMON MINIMUM 6 EACH END | EXTERIOR LOAD BEARING 130 MPH | 2 |
| 6' | (3) 2x12 | 16d COMMON MINIMUM 12 EACH END | EXTERIOR LOAD BEARING 130 MPH | 3 |
| 8' | 3.125x8.25 | 16d COMMON MINIMUM 14 EACH END | EXTERIOR LOAD BEARING 130 MPH | 3 |
| 10' | 3.125x11 | 16d COMMON MINIMUM 14 EACH END | EXTERIOR LOAD BEARING 130 MPH | 4 |

### CEILING JOISTS - 20 PSF LIVE LOAD
10 PSF DEAD LOAD, 240 DEFLECTION

| Size | Spacing | Visually Graded | | |
|---|---|---|---|---|
| | | No. 1 | No. 2 | No. 3 |
| 2x4 | 16" | 8'–11" | 8'–0" | 6'–2" |
| | 24" | 7'–8" | 6'–7" | 5'–1" |
| 2x6 | 16" | 14'–0" | 12'–0" | 9'–2" |
| | 24" | 11'–5" | 9'–10" | 7'–5" |
| 2x8 | 16" | 17'–9" | 15'–3" | 11'–6" |
| | 24" | 14'–6" | 12'–6" | 9'–5" |
| 2x10 | 16" | 20'–9" | 18'–1" | 13'–11" |
| | 24" | 16'–11" | 14'–9" | 11'–5" |

### RAFTERS - 30 PSF LIVE LOAD
10 PSF DEAD LOAD, 240 DEFLECTION

| Size | Spacing | Visually Graded Max. Span | | |
|---|---|---|---|---|
| | | No. 1 | No. 2 | No. 3 |
| 2x6 | 16" | 12'–3" | 11'–2" | 8'–6" |
| | 24" | 10'–7" | 9'–2" | 6'–11" |
| 2x8 | 16" | 16'–2" | 14'–2" | 10'–8" |
| | 24" | 13'–5" | 11'–7" | 8'–9" |
| 2x10 | 16" | 19'–3" | 16'–10" | 13'–0" |
| | 24" | 15'–9" | 13'–9" | 10'–7" |
| 2x12 | 16 | 22'–10" | 19'–10" | 15'–4" |
| | 24" | 18'–8" | 16'–2" | 12'–5" |

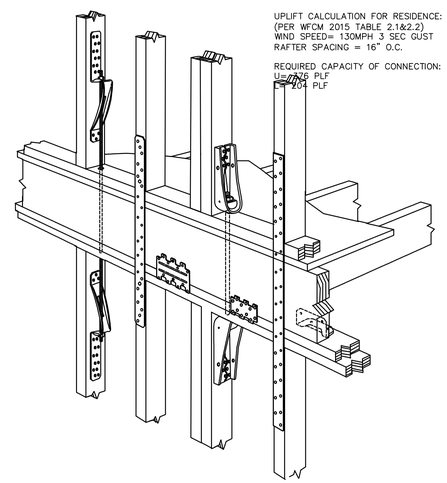


1 A401 TYPICAL FRAMING STRAPPING
SCALE: NTS

## GENERAL NOTES:

1. ALL INSTALLATIONS SHALL MEET ADAAG HANDICAP REQUIREMENTS.
2. HOT WATER AND DRAIN PIPES SHALL BE INSULATED OR COVERED
3. FAUCETS SHALL BE HANDLE ACTIVATED
4. INSULATION AND INSULATION ASSEMBLIES SHALL MEET THE REQUIREMENTS OF SECTION 719, INTERNATIONAL BUILDING CODE, 2015.
5. PROVIDE 5' X 5' LANDINGS OUTSIDE OF EXTERIOR DOORS LEVEL WITH THE FLOOR.THRESHOLDS SHALL BE NOT MORE THAN ½" IN HEIGHT AND SHALL BE BEVELED IF MORE THAN ¼". ALL GROUND AND FLOOR SURFACES SHALL BE NON–SLIP.
6. CONTRACTOR TO VERIFY ALL SITE CONDITIONS AND BUILDING LOCATION PRIOR TO CONSTRUCTION.
7. MATERIALS SHALL BE NEW AND U.L. LISTED.
8. NO WORK SHALL BE CONCEALED UNTIL APPROVED BY LOCAL INSPECTORS.
9. CONSTRUCTION SHALL COMPLY WITH ALL PARISH, STATE AND LOCAL CODES.
10. CONTRACTOR SHALL FURNISH WATER AND POWER FROM EXISTING SOURCES.
11. EXTERIOR CAULKING SHALL BE THIOKAL CAULK OR EQUIVALENT
12. PAINT GRADE TO BE SHERWIN WILLIAMS OR EQUIVALENT, ALL WORK TO RECEIVE MIN. OF 2 COATS. COLOR SELECTION BY OWNER.
13. ALL CORNERS SHALL BE PROPERLY BRACED FOR WIND LOADS.
14. LOCKS ON DOORS IN MEANS OF EGRESS SHALL NOT REQUIRE USE OF A KEY (INTERIOR SIDE). SPECIAL DEVICE OR SPECIAL KNOWLEDGE TO OPEN IN THE DIRECTION OF EGRESS.
15. FIRE EXTINGUISHERS SHALL BE IN ACCORDANCE WITH NFPA 10 APPENDIX "E".
16. BACKFILL AROUND FOUNDATION SHALL BE INSTALLED WITH A SLOPE OF 6" FOR THE FIRST 10 FEET AROUND PERIMETER OF FOUNDATION.

## INSULATION:

1. CONCEALED INSULATION IN BUILDINGS OF ANY TYPE CONSTRUCTION SHALL HAVE A FLAME SPREAD INDEX OF NOT MORE THAN 25 AND A SMOKE DEVELOPED INDEX OF NOT MORE THAN 450.
2. INSULATION AND COVERING ON PIPES AND TUBING SHALL HAVE A FLAME SPREAD INDEX OF NOT MORE THAN 25 OR A SMOKE DEVELOPED INDEX OF NOT MORE THAN 450.
3. ALL WALL INSULATION SHALL BE AT LEAST R–13 AND FACINGS SHALL COMPLY WITH IBC 719.2.
4. ALL CEILING AND ROOF INSULATION SHALL BE AT LEAST R–30 AND FACINGS SHALL COMPLY WITH IBC 719.2.

## CONCEALED SPACES:

1. FIREBLOCKING AND DRAFTSTOPPING SHALL BE INSTALLED IN COMBUSTIBLE CONCEALED LOCATIONS IN ACCORDANCE WITH IBC. 717.
2. FIREBLOCKING SHALL CONSIST OF EITHER 2 INCH NOMINAL LUMBER, TWO LAYERS OF INCH LUMBER WITH BROKEN LAP JOINTS, GYPSUM BOARD, CEMENT FIBER BOARD, BATTS OR BLANKETS OF MINERAL OR GLASS MATERIALS INSTALLED IN SUCH A MANNER AS TO BE SECURELY FASTENED IN PLACE.
3. FIREBLOCKING SHALL BE PROVIDED IN CONCEALED SPACES OF STUD WALLS AND PARTITIONS, INCLUDING FURRED SPACES AND PARALLEL ROWS OF STUDS VERTICALLY AT CEILING AND FLOOR LEVELS, AND HORIZONTALLY AT INTERVALS NOT EXCEEDING 1 FT.
4. FIREBLOCKING SHALL BE PROVIDED AT INTERCONNECTIONS BETWEEN CONCEALED VERTICAL STUD WALL OR PARTITION SPACES AND CONCEALED HORIZONTAL SPACES CREATED BY AN ASSEMBLY OF FLOOR JOISTS OR TRUSSES; AND BETWEEN CONCEALED VERTICAL AND HORIZONTAL SPACES WHICH OCCURS AT SOFFITS, DROP CEILINGS, AND SIMILAR LOCATIONS.
5. FIREBLOCKING SHALL BE INSTALLED AT OPENINGS AROUND VENTS, PIPES, DUCTS, CHIMMNEYS, AND FIREPLACES AT CEILING AND FLOOR LEVELS, WITH AN APPROVED MATERIAL.
6. DRAFTSTOPPING SHALL BE INSTALLED IN COMBUSTIBLE CONSTRUCTION AS PER IBC 717.3, 4, & 5. DRAFTSTOPPING MATERIALS SHALL NOT BE LESS THAN ½" GYPSUM BOARD, 0.375 PARTICLE BOARD OR OTHER APPROVED MATERIALS.
7. DRAFTSTOPPING SHALL BE INSTALLED IN ATTIC SPACES TO PREVENT THE HORIZONTAL AREA FROM BEING GREATER THAN 3000 SQ. FT.

## INTERIOR FINISHES:

1. INTERIOR WALL AND CEILING FINISHES FOR APARTMENT NON–SPRINKLERED AS PER TABLE 803.5 IBC 2015 SHALL HAVE VERTICAL EXITS AND PASSAGEWAYS AND EXIT ACCESS CORRIDORS OF CLASS A: FLAME SPREAD 0–25 AND SMOKE DEVELOPED 0–450.
2. INTERIOR WALL AND CEILING FINISHES FOR APARTMENT NON–SPRINKLERED AS PER TABLE 803.5 IBC 2015 SHALL HAVE ROOMS AND ENCLOSED SPACES OF CLASS C: FLAME SPREAD 76–200; AND SMOKE DEVELOPED 0–450.
3. INTERIOR FLOOR FINISHES SHALL COMPLY WITH SECTION 804 IBC 2015.
4. INTERIOR DECORATIONS AND TRIMS SHALL COMPLY WITH SECTION 805 IBC 2015.

## FRAMING:

1. JOISTS SHALL BE SUPPORTED LATERALLY AT THE ENDS AND AT EACH SUPPORT BY SOLID BLOCKING EXCEPT WHERE ENDS OF THE JOISTS ARE NAILED TO A HEADER, BAND, OR RIM JOIST BY OTHER MEANS.
2. SOLID BLOCKING SHALL NOT BE LESS THAN 2 INCHES IN THICKNESS AND THE FULL DEPTH OF THE JOIST.
3. NOTCHES ON THE ENDS OF JOISTS SHALL NOT EXCEED ONE–FOURTH THE JOIST DEPTH.
4. HOLES BORED IN JOISTS SHALL NOT BE WITHIN 2 INCHES OF THE TOP OR BOTTOM OF THE JOIST.
5. THE DIAMETER OF ANY BORED HOLE SHALL NOT EXCEED ONE–THIRD THE DEPTH OF THE JOIST.
6. NOTCHES IN THE TOP OR BOTTOM OF JOISTS SHALL NOT EXCEED ONE–SIXTH THE DEPTH AND SHALL NOT BE LOCATED IN THE MIDDLE THIRD OF THE SPAN AND SHALL NOT BE LONGER THAN ONE THIRD OF THE DEPTH OF THE MEMBER. THE TENSION SIDE OF MEMBERS 4 INCHES OR GREATER NOMINAL THICKNESS SHALL NOT BE NOTCHED EXCEPT AT THE ENDS OF THE MEMBERS.
7. JOIST FRAMING FROM OPPOSITE SIDES OF A BEAM, GIRDER OR PARTITION SHALL BE LAPPED AT LEAST 3 INCHES OR THE OPPOSING JOISTS SHALL BE TIED TOGETHER IN AN APPROVED MANNER.
8. TRIMMER AND HEADER JOISTS SHALL BE DOUBLED OR OF LUMBER OF EQUIVALENT CROSS SECTION WHEN THE SPAN OF THE HEADER EXCEED 4 FEET.
9. THE ENDS OF HEADER JOISTS MORE THAN 6 FEET SHALL BE SUPPORTED BY FRAMING ANCHORS OR JOIST HANGARS UNLESS BEARING ON A BEAM, PARTITION, OR WALL.
10. EXCEPT WHERE SUPPORTED ON A 1–INCH BY 4 INCH RIBBON STRIP AND NAILED TO THE ADJOINING STUD, THE ENDS OF EACH JOIST SHALL NOT HAVE LESS THAN 1½" OF BEARING ON WOOD OR METAL, OR LESS THAN 3 INCHES ON MASONRY.
11. STUDS SHALL BE PLACED WITH THEIR WIDE DIMENSION PERPENDICULAR TO THE WALL. A MINIMUM OF THREE STUDS SHALL BE INSTALLED AT ALL CORNERS OF EXTERIOR WALLS.
12. END JOINTS IN DOUBLE TOP PLATES SHALL BE OFFSET AT LEAST 48 INCHES AND SHALL BE NAILED WITH NOT LESS THAN 8 16D FACE NAILS ON EACH SIDE OF THE JOINT.
13. WHERE PLUMBING, HEATING, OR OTHER PIPES ARE PLACED IN OR PARTLY IN A PARTITION, OR WHERE CUTTING OF SOLES OR PLATES IS REQUIRED, A METAL TIE NOT LESS THAN 0.058 INCH (16 GA. GALVANIZED) AND 1½" INCHES WIDE SHALL BE FASTENED TO EACH PLATE AND TO EACH SIDE OF OPENING WITH NOT LESS THAN SIX 16D NAILS.
14. IN EXTERIOR WALLS AND BEARING PARTITIONS, ANY WOOD STUD IS PERMITTED TO BE CUT OR NOTCHED TO A DEPTH NOT EXCEEDING 25 PERCENT OF ITS WIDTH. WHEN PIPING OR DUCTWORK IS PLACED IN OR PARTLY IN AN EXTERIOR WALL OR INTERIOR LOAD BEARING WALL, NECESSITATING CUTTING, DRILLING OR NOTCHING OF THE TOP PLATE BY MORE THAN 50 PERCENT OF ITS WIDTH, A GALVANIZED METAL TIE NOT LESS
THAN 0.054 INCH THICK AND 1 ½ INCHES WIDE SHALL BE FASTENED ACROSS AND TO THE PLATE AT EACH SIDE OF THE OPENING WITH NOT LESS THAN EIGHT 10D NAILS HAVING A MINIMUM LENGTH OF 1 ½ INCHES AT EACH SIDE OR EQUIVALENT. THE METAL
TIE MUST EXTEND A MINIMUM OF 6 INCHES PAST THE OPENING.
15. IN NON BEARING WALLS CUTTING OR NOTCHING OF THE STUD SHALL NOT BE GREATER THAN 40 PERCENT OF THE WIDTH.
16. A HOLE NOT GREATER IN DIAMETER THAN 40 PERCENT OF THE STUD WIDTH IS PERMITTED TO BE BORED IN ANY WOOD STUD. BORED HOLES NOT GREATER THAN 60 PERCENT OF WIDTH OF STUD ARE PERMITTED IN NONBEARING PARTITIONS OR IN ANY WALL WHERE EACH BORED STUD IS DOUBLED, PROVIDED THAT NOT MORE THAN TWO SUCCESSIVE STUDS ARE BORED.
17. IN NO CASE SHALL THE EDGE OF THE BORED HOLE BE NEARER THAN ⅝" TO THE EDGE OF THE STUD.
18. I–JOIST TYPE STURDY FLOORING SHALL HAVE SOLID BLOCKING INSTALLED ON EACH SIDE OF WEB AT ALL BEARING LOCATIONS. BLOCKING SHALL ALSO BE INSTALLED PERPENDICULAR TO JOIST AT ENDS AND QUARTER SPAN FOR LATERAL BRACING.
19. ALL WOOD FRAMING, FABRICATION, AND ERECTION SHALL CONFORM TO THE NATIONAL DESIGN SPECIFICATION FOR WOOD CONSTRUCTION BY THE NFPA, THE PLYWOOD DESIGN SPECIFICATION, AND THE APA AND MEET THE REQUIREMENTS BELOW. UNLESS NOTED OTHERWISE, ALL WOOD CONNECTIONS SHALL BE IN ACCORDANCE WITH THE FASTENING SCHEDULE OF THE ANSI WOOD FRAME CONSTRUCTION MANUAL FOR 130 MPH WIND LOADS, LATEST EDITION. ALL LUMBER IN CONTACT WITH CONCRETE OR MASONRY SHALL BE ACQ TREATED.
20. ALL FRAMING LUMBER SHALL BE SOUTHERN YELLOW PINE, S4S NO. 2 MAXIMUM MOISTURE CONTENT OF 15%. STUD WALLS AND PARTITIONS SHALL BE SIZED AS FOLLOWS:
–FIRST FLOOR PARTITIONS: 2X4
–SECOND FLOOR PARTITIONS: 2X4
–WET WALLS: 2X6
–EXTERIOR WALLS ON MULTIPLE STORY (UP TO 2): 2X6
21. ALL STUDS TO BE BLOCKED AT MID–HEIGHT. RAMSET BOTTOM PLATE OF STUD WALLS TO CONCRETE WITH ¼" RAMSETS @ 16" O.C. ON SLAB CONSTRUCTION ON INTERIOR WALLS.
22. FLOOR, ATTIC, AND ROOF FRAMING SHALL BE OF SIZES AS INDICATED ON FRAMING PLANS. PROVIDE WOOD CROSS BRIDGING WHERE INDICATED ON DRAWINGS OR WHEN JOIST SPANS EXCEED EIGHT FEET. LOCATE (3) 2X12 BEAMS BELOW BEARING WALLS OF WALLS ABOVE, AND(OR) AS INDICATED ON FRAMING PLANS. BEAM SHALL BEAR ON ENTIRE WIDTH OF BEARING WALL TOP PLATE. LOCATE (3) STUDS AT BEAM BEARING POINTS BELOW DOUBLE TOP PLATE. SEE CUTTING AND NOTCHING BEAM/JOIST NOTES.
23. PROVIDE WOOD COLLAR BRACES AT EACH RAFTER 24" BELOW CROWN OF ROOF WITH (5) 8D COMMON NAILS @ EACH END OF TIE, UNLESS MORE OTHERWISE NOTED. NOT NECESSARY FOR PREFABRICATED WOOD TRUSSES.
24. PLYWOOD SUB FLOORING – UNDERLAYMENT C–C PLUGGED, APA 48/24, ¾" THICK TONGUE AND GROOVE. GLUED AND NAILED TO FLOOR JOISTS WITH 8D COMMON NAILS SPACED AT 6" O.C. AT PANEL EDGES AND AT 12" O.C. AT INTERMEDIATE SUPPORTS.
25. OSB/PLYWOOD ROOF SHEATHING – APA RATED 24 /0, MINIMUM ⅝" THICK. PROVIDE PLYCLIPS AT UNSUPPORTED EDGES BETWEEN ROOF JOISTS.
26. COORDINATE FRAMING WITH HVAC DUCTS, ELECTRICAL AND PLUMBING REQUIREMENTS.
27. JOIST HANGARS SHALL BE 16 GA. GALV. TYPE "U" AS MANUFACTURED BY SIMPSON STRONG TIE CO. INSTALL JOIST HANGERS IN STRICT ACCORDANCE WITH THE MANUFACTURER'S WRITTEN INSTRUCTIONS. USE JOIST HANGERS FOR BEAMS AND JOISTS
WHICH FRAME TO BEAMS AT THE SAME ELEVATION. JOIST HANGERS SHALL BE SAME SIZE AS MEMBER SUPPORTED.
28. PROVIDE SIMPSON H10A AT EACH RAFTER CONNECTION, OR EQUIVALENT, UNLESS ANOTHER ANCHORING METHOD IS INDICATED. FASTEN IN ACCORDANCE WITH MANF. WRITTEN INSTRUCTIONS. PROVIDE ADDITIONAL TIE DOWNS FOR PREFABRICATED WOOD TRUSSES PER FABRICATOR'S RECOMMENDATIONS.
29. GLUE AND NAIL HEADERS @16" O.C. ALONG TOP AND BOTTOM EDGES WITH 16D COMMON STRAP HEADERS AND SILLS WITH SIMPSON STRAP

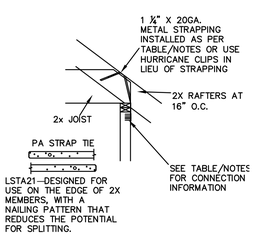


2 A401 TYPICAL HOLDDOWN ANCHOR
SCALE: N.T.S.

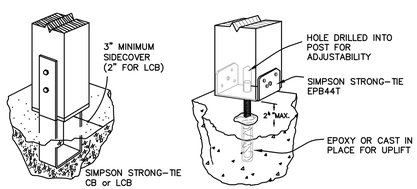


3 A401 TYPICAL COLUMN CONNECTION
SCALE: N.T.S.

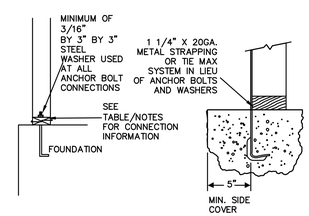


4 A401 TYPICAL FOUNDATION ANCHOR
SCALE: N.T.S.

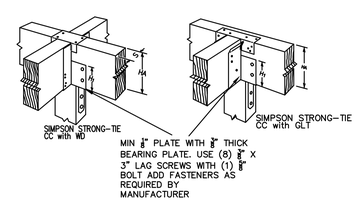


5 A104 TYPICAL CONNECTION DETAIL
SCALE: N.T.S.

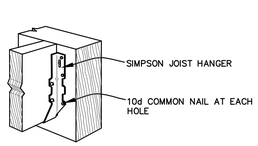


6 A401 TYPICAL JOIST CONNECTION
SCALE: N.T.S.

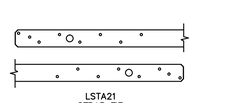


7 A401 TYPICAL RIDGE STRAP
SCALE: N.T.S.

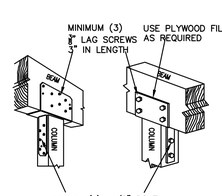


8 A401 TYPICAL BEAM-COLUMN CONNECTION
SCALE: N.T.S.

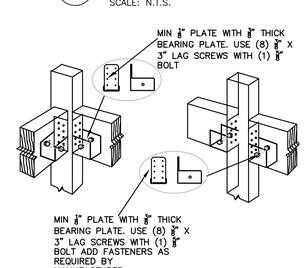


9 A401 TYPICAL BEAM-COLUMN CONNECTION
SCALE: N.T.S.

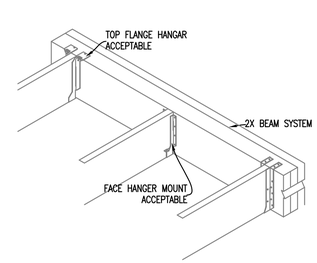


10 A401 TYPICAL HANGAR DETAIL
SCALE: NTS

NOBLES & ASSOCIATES L.L.C.
PROFESSIONAL ENGINEERS, LAND SURVEYORS, & DESIGNERS
562 COLUMBIA STREET, BOGALUSA, LA. 70427 P: 985-723-0380
800 MARINERS PLAZA, SUITE 800, MANDEVILLE, LA. 70448 P: 985-727-7221

NEW BUILDING FOR
SUPERIOR AVENUE CHURCH
SANCTUARY
HIGHWAY 21, BOGALUSA, LA 70427

| Rev. No. | Date | Description |
|---|---|---|
| | | |

ENGINEER OF RECORD
NAME GEORGE NOBLES
NUMBER 31767

FRAMING NOTES
FRAMING DETAILS
NAILING SCHEDULE

Job No. E-00165
Dwn. SWL Chk. GBN
Date 01/25/2022 Rev. REV. 0

A401
Sheet 1 Of *

THESE DRAWINGS ARE THE SOLE PROPERTY OF NOBLES & ASSOCIATES L.L.C., AND ARE ISSUED AS INSTRUMENTS OF SERVICE. THESE DRAWINGS SHALL NOT BE COPIED, REPRODUCED OR USED IN ANY MANNER WITHOUT WRITTEN CONSENT OF NOBLES & ASSOCIATES L.L.C.

REVISED: Z:\ENGINEERING\NEW JOBS\E-00165\Superior Avenue Church\DWG\Multipurpose

COPYRIGHT 2021, NOBLES & ASSOCIATES, L.L.C.

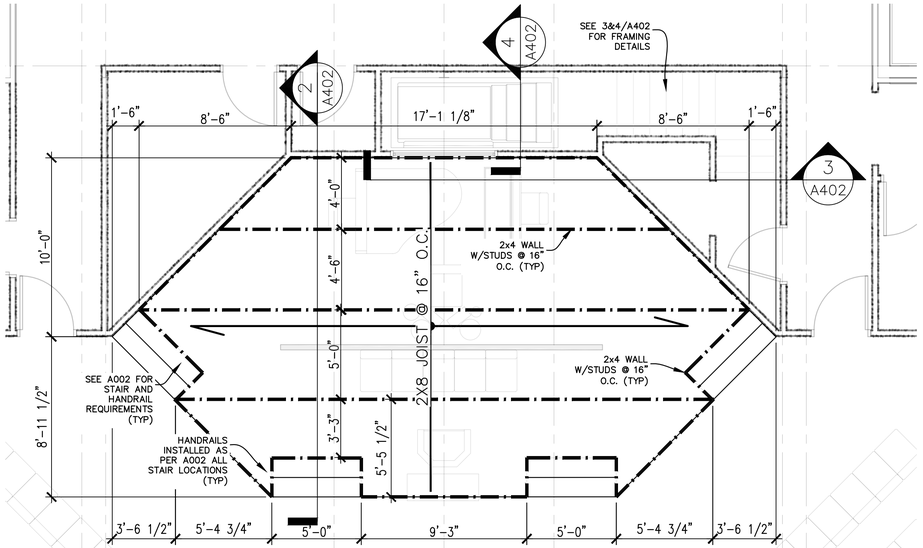


1 A402 STAGE FRAMING PLAN

SCALE: 1/4 = 1"

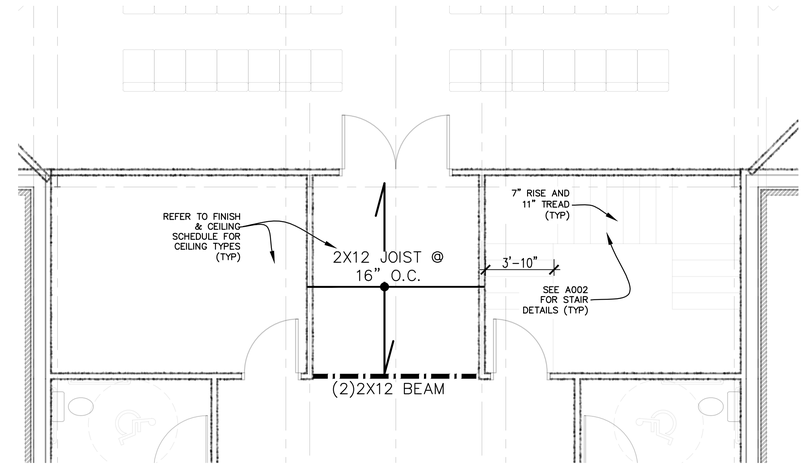


6 A402 MAINTENANCE AREA UPSTAIR

SCALE: 1/4 = 1"

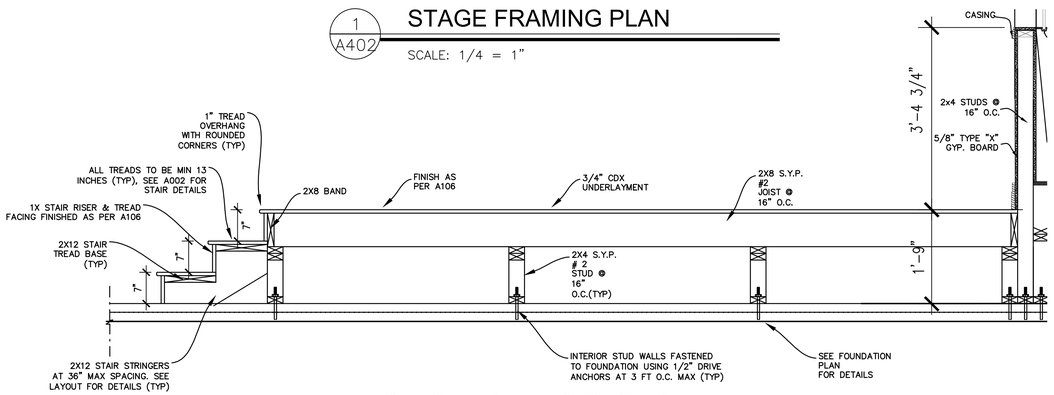


2 A402 STAGE FRAMING SECTION

SCALE: NTS

## LEGEND

- TYPICAL JOIST/RAFTER ILLUSTRATING SPAN DIRECTION
- TYPICAL SPACING DIRECTION
- -- JOIST/RAFTER DIAGRAM DESCRIPTION
- -- PRIMARY BEAM
- -- SECONDARY BEAM
- -- STRUCTURAL BRACE
- -- FLOOR JOIST/TRUSS

PRELIMINARY DOCUMENT

NOT INTENDED FOR CONSTRUCTION, BIDDING, SALES OR ISSUANCE OF A PERMIT

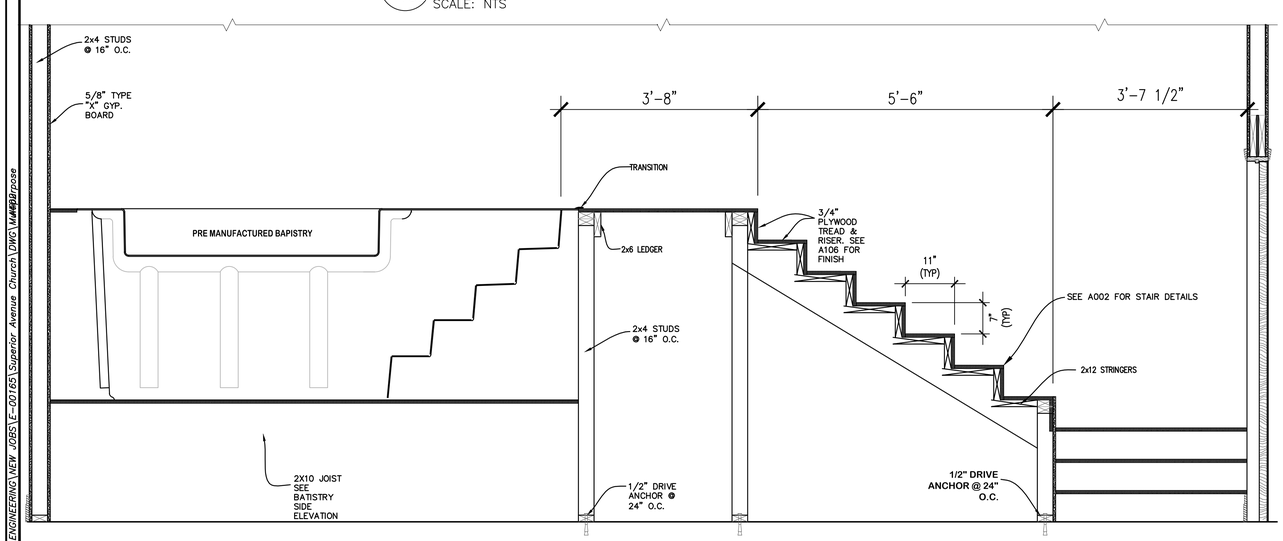


3 A402 FRONT ELEVATION BAPTISMAL

SCALE: NTS

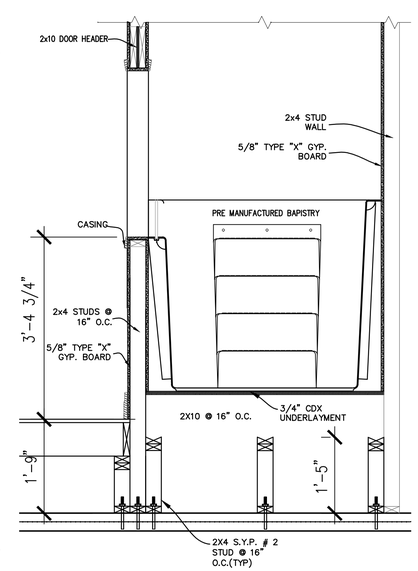


4 A402 SIDE ELEVATION BAPTISMAL

SCALE: NTS

Baptistry Info.

| | |
|---|---|
| Width: | 3'-11" |
| Length: | 9'-4" |
| Depth: | 43" |
| Water Capacity: | 475 gal. |
| Unit Weight. | 240 lb. Dry |

Recommended Heater:
PBH 5.5 kw / EZ Fill 750 / Drain and overflow
Available In Blue, White or Bone

***Window is Optional***

Note:
All interior corners are rounded for safety.

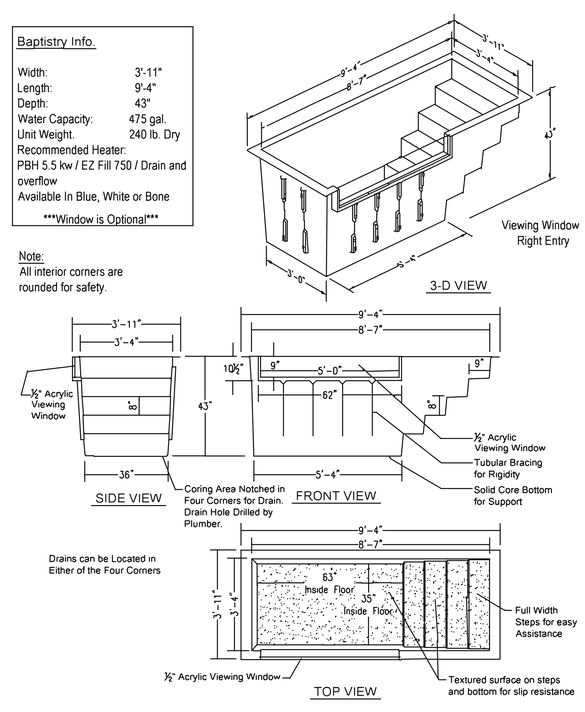


5 A402 BAPTISMAL MANUFACTUER DETAILS

SCALE: NTS

NOBLES & ASSOCIATES L.L.C.
PROFESSIONAL ENGINEERS, LAND SURVEYORS, & DESIGNERS
562 COLUMBIA STREET, BOGALUSA, LA. 70427 P: 985-723-0380
800 MARINERS PLAZA, SUITE 808, MANDEVILLE, LA. 70448 P: 985-727-7221

NEW BUILDING FOR

# SUPERIOR AVENUE CHURCH

SANCTUARY

HIGHWAY 21, BOGALUSA, LA 70427

| Rev. No. | Date | Description |
|---|---|---|
| | | |

ENGINEER OF RECORD
NAME GEORGE NOBLES
NUMBER 31767

FRAMING PLAN
FRAMING DETAILS

Job No. E-00165

| Dwn. | Chk. |
|---|---|
| SWL | GBN |
| Date | Rev. |
| 01/25/2022 | REV. 0 |

A402

Sheet 1 Of *

THESE DRAWINGS ARE THE SOLE PROPERTY OF NOBLES & ASSOCIATES L.L.C., AND ARE ISSUED AS INSTRUMENTS OF SERVICE. THESE DRAWINGS SHALL NOT BE COPIED, REPRODUCED OR USED IN ANY MANNER WITHOUT WRITTEN CONSENT OF NOBLES & ASSOCIATES L.L.C.

REVISED: Z:\ENGINEERING\NEW JOBS\E-00165\Superior Avenue Church\DWG\A##Purpose

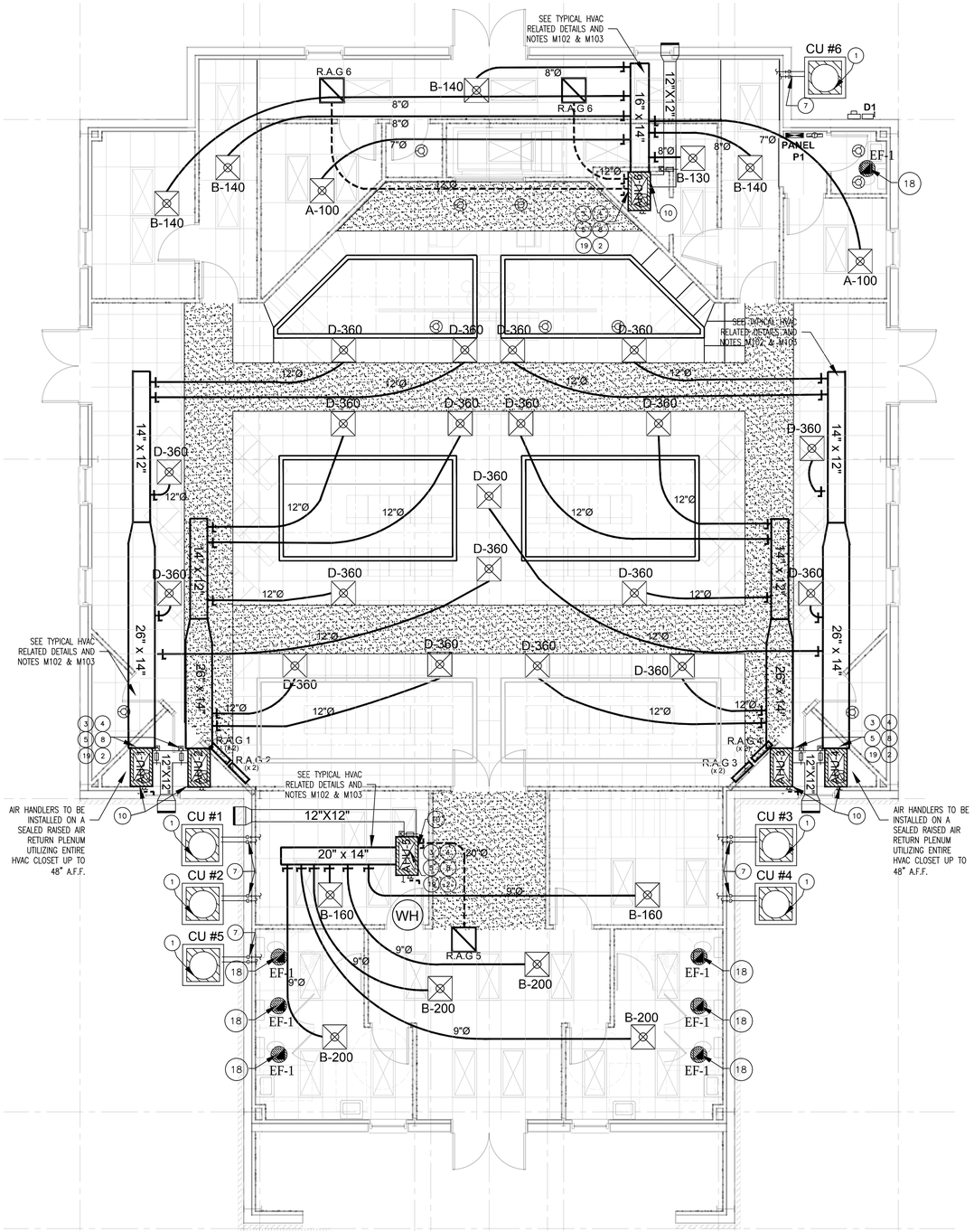


A
M101

## MECHANICAL PLAN

SCALE: 3/16"=1'

## AIR HANDLING UNIT SCHEDULE (AHU)

| PLAN MARK | ELECTRICAL SERVICE | TOTAL CFM | OUTSIDE AIR CFM | ELEC. DATA | COOLING COIL DATA: TOTAL GAIN BTUH | LATENT BTUH | SENSIBLE BTUH | TOTAL LOSS BTUH | REMARKS | NOTES |
|---|---|---|---|---|---|---|---|---|---|---|
| AHU 1,2,3,4 | SEE PLANS | 1990 | 510 | 1P- 120/240V | 57,000 | 29,410 | 31,585 | 40,375 | RHEEM OR EQUAL - RH1T6024STAN OR EQUAL WITH AHRI# 7492673 W/14.4KW HEATER | 1, 2, 4, 5 |
| AHU 5 | SEE PLANS | 1050 | 250 | 1P- 120/240V | 40,924 | 15,600 | 28,714 | 52,537 | RHEEM OR EQUAL - RH1T4821TAN OR EQUAL WITH AHRI# 7492558 W/14.4KW HEATER | 1, 2, 4, 5 |
| AHU 6 | SEE PLANS | 1050 | 100 | 1P- 120/240V | 40,924 | 15,600 | 28,714 | 52,537 | RHEEM OR EQUAL - RH1T4821STAN OR EQUAL WITH AHRI# 7492559 W/14.4KW HEATER | 1, 2, 4, 5 |
| | | | | | | | | | | |
| ALL UNITS TO BE SELECTED BASED ON COOLING DATA LISTED ABOVE, CONTRACTOR SHALL USE ALL APPLICABLE CODE REQUIREMENTS WHEN SELECTING UNIT | | | | | | | | | | |

1. EXTERNAL STATIC PRESSURE LOSSES DO NOT INCLUDE LOSS FOR DIRTY FILTERS.
2. UNIT SHALL HAVE SINGLE POINT ELECTRICAL CONNECTION.
3. MCA & MIN AMP IS GIVEN FOR EACH STAGE OF HEATING (1st STAGE W/ BLOWER) / (2nd STAGE)
4. CONTRACTOR SHALL FURNISH UNIT WITH DUAL REFRIGERANT CIRCUITS
5. FILTER RACK SHALL BE LOCATED AT AIR UNIT.

## CONDENSING UNIT SCHEDULE (CU)

| PLAN MARK | TONS OF REFR. | COMPRESSOR MOTOR DATA: NO. REQ'D | R.L.A. | TYPE REFR. | SUCT. TEMP. | VOLTS | PH. / HZ. | CONDENSER DATA: AMBIENT TEMP. | COND. TEMP. | NO. OF FANS | H.P. EACH | VOLTS | PH. / HZ. | MINIMUM CIRCUIT AMPACITY | MAXIMUM FUSE SIZE | REMARKS |
|---|---|---|---|---|---|---|---|---|---|---|---|---|---|---|---|---|
| CU-1,2,3,4 | 5.0 | 1 | 19.9 | 410-a | 47 | 208/230 | 1 / 60 | 95 | 120 | 1 | 1/5 | 208/230 | 1 / 60 | 47 | 60 | RHEEM OR EQUAL - RA1460AJ1 OR EQUAL |
| CU-5 | 2.5 | 1 | 19.9 | 410-a | 47 | 208/230 | 1 / 60 | 95 | 120 | 1 | 1/5 | 208/230 | 1 / 60 | 47 | 60 | RHEEM OR EQUAL - RA1448AJ1 OR EQUAL |
| CU-6 | 2.0 | 1 | 19.9 | 410-a | 47 | 208/230 | 1 / 60 | 95 | 120 | 1 | 1/5 | 208/230 | 1 / 60 | 47 | 60 | RHEEM OR EQUAL - RA1448AJ1 OR EQUAL |

1. LOW AMBIENT TO 10°F.
2. ALL CONDENSING UNITS SHALL BE A MINIMUM OF 13 SEER.
3. UNIT SHALL HAVE SINGLE POINT ELECTRICAL CONNECTION.

## EXHAUST FAN SCHEDULE

| PLAN MARK | SERVICE | TOTAL CFM | S.P. LOSS IN. W.C. | HORSE POWER | FAN RPM | MOTOR RPM | DRIVE TYPE | MAX. SONES | ELECTRIC SERVICE | REMARKS |
|---|---|---|---|---|---|---|---|---|---|---|
| EF-1 | ADA RESTROOM | 75 | .20 | 49 WATTS | 950 | N/A | DIRECT | 1.4 | 120/1/60 | CABINET TYPE, DIRECT DRIVE, GREENHECK SP-A110 OR BROAN |
| | | | | | | | | | | |
| | | | | | | | | | | |

1. INTERLOCK FAN CONTROL WITH LIGHT SWITCH TO OPERATE FROM EACH ROOM. REFER TO ELECTRICAL LIGHTING PLAN FOR ADDITIONAL FIXTURE DETAILS AND INFORMATION

## DUCT SIZING CHART

| METAL DUCT: ROUND DUCT SIZE | SUPPLY AIR CFM | RETURN AIR CFM | FLEX DUCT: ROUND DUCT SIZE | SUPPLY AIR CFM | RETURN AIR CFM |
|---|---|---|---|---|---|
| 4 | 33 | | 4 | 20 | |
| 5 | 58 | 45 | 5 | 42 | 32 |
| 6 | 93 | 72 | 6 | 68 | 52 |
| 7 | 145 | 111 | 7 | 105 | 81 |
| 8 | 210 | 155 | 8 | 150 | 115 |
| 9 | 275 | 210 | 9 | 200 | 151 |
| 10 | 365 | 280 | 10 | 265 | 205 |
| 12 | 600 | 450 | 12 | 430 | 330 |
| 14 | 900 | 700 | 14 | 650 | 500 |
| 16 | 1300 | 980 | 16 | 950 | 730 |
| 18 | 1750 | 1350 | 18 | 1275 | 975 |
| 20 | 2300 | 1800 | 20 | 1750 | 1300 |

NON-FILTER GRILL: H x W x 3 = CFM
FILTER GRILL: H x W x 2 = CFM

## DIFFUSER SCHEDULE (COMMERCIAL)

| SYM. | CFM RANGE | FACE SIZE | NECK SIZE | REMARKS |
|---|---|---|---|---|
| A | 0-130 | 24"X24" | 6" | LOUVER FACED, SUPPLY. NAILOR IND. MODEL# UNI |
| B | 130-230 | 24"X24" | 8" | LOUVER FACED, SUPPLY. NAILOR IND. MODEL# UNI |
| C | 230-320 | 24"X24" | 10" | LOUVER FACED, SUPPLY. NAILOR IND. MODEL# UNI |
| D | 325-600 | 24"X24" | 12" | LOUVER FACED, SUPPLY. NAILOR IND. MODEL# UNI |
| E | 600-850 | 24"X24" | 14" | LOUVER FACED, SUPPLY. NAILOR IND. MODEL# UNI |

## MECH LEGEND

| | |
|---|---|
| | NEW DIFFUSER, SEE SCHEDULE |
| | LOW PRESSURE ROUND BRANCH DUCT W/ SIZE AND VOLUME DAMPER (RETURN) |
| | LOW PRESSURE ROUND BRANCH DUCT W/ SIZE AND VOLUME DAMPER (SUPPLY) |
| | THERMOSTAT |
| | 12"X12" EXHAUST GRILLE SEE PLANS FOR CFM |
| | 24"X24" EGG CRATE RETURN AIR GRILLE, TYPICAL. |
| | 24"X48" RETURN AIR GRILLE |

## MECHANICAL PLAN NOTES

| MRK | DESCRIPTION |
|---|---|
| 1 | CONDENSING UNIT MOUNTED ON CONCRETE PAD. LOCATE A MINIMUM OF 3'–0" APART (TYPICAL). |
| 2 | GALVANIZED SECONDARY DRAIN PAN. EXTEND DRAIN PAN 6" BEYOND EACH SIDE OF UNIT. PAN SHALL HAVE A FLOAT SWITCH TO LOCK OUT THE CONDENSING UNIT. TYPICAL FOR EACH AIR UNIT. |
| 3 | FLEX. CONNECTION INLET AND DISCHARGE OF ALL UNITS. (TYPICAL) |
| 4 | 8"X8" OUTSIDE AIR DUCT WITH M.V.D. LOCATE MINIMUM 15'–0" FROM ANY EXHAUST. |
| 5 | ROUTE REFRIGERANT LINES EXPOSED THROUGH ATTIC. ROUTE DOWN EXTERIOR WALL TO RESPECTIVE CONDENSING UNIT. TURN OUT OF WALL 0'–6" ABOVE GRADE. SEAL WALL PENETRATION WATER TIGHT. TYPICAL FOR ALL AIR UNITS. |
| 6 | SPIN COLLAR W/ AIR SCOOP AND M.V.D., TYPICAL ROUND DUCT TAKE–OFF. REFER TO DETAIL |
| 7 | REFRIGERANT LINES (TYPICAL) ROUTE UP EXTERIOR WALL THROUGH TO THE ATTIC TOWARD THE RESPECTIVE AIR HANDLING UNIT. REFRIGERANT LINES SHALL BE SIZED IN STRICT ACCORDANCE WITH MANUFACTURER'S RECOMMENDATIONS. |
| 8 | 1–1/4" CONDENSATE DRAIN LINE W/ AIR TRAP, ROUTE TO NEAREST INTERIOR OR EXTERIOR PLUMBING CONNECTION. INSULATE CONDENSING DRAIN LINE, REFER TO SPECS. DRAIN INDIRECTLY INTO THE TRAP. MAINTAIN AIR GAP. TYPICAL FOR EACH AIR UNIT. |
| 9 | DELETED. |
| 10 | MANUAL VOLUME DAMPER (TYPICAL) |
| 11 | DIGITAL PROGRAMMABLE THERMOSTAT WITH DEHUMIDIFICATION SEQUENCE EQUAL CARRIER MODEL #33CS450–01 OR EQUAL. |
| 12 | RETURN AIR TRANSFER ASSEMBLY W/ TWO (2) 12"X12" EGG CRATE GRILLES CONNECTED TOGETHER WITH 10" DIAMETER HARD METAL DUCT AS REQUIRED IN WALL AT 8 FT A.F.F. |
| 13 | 24" X 48" RETURN GRILL. (TYPICAL) NAILOR IND. MODEL# 51EC |
| 14 | DELETED. |
| 15 | 2" ACCOUSTICAL INSULATION ON ALL INTERIOR WALLS IN MECHANICAL ROOM. REFER TO SPECIFICATION. |
| 16 | ALL RECTANGULAR DUCT SHALL HAVE A 1" INSULATION LINER (SUPPLY & RETURN) AND 2" OF EXTERNAL INSUALTION (SUPPLY ONLY). |
| 17 | DELETED |
| 18 | 6" ROUND OUTSIDE AIR DUCT UP TO EXHAUST HOOD ON ROOF W/ PREFABRICATED ROOF CURB. LOCATE ON BACK SIDE OF RIDGE. LOCATE MINIMUM 15'–0" FROM ANY INTAKE. |
| 19 | TURNING VANES IN ALL ELBOWS 45 DEGREES AND GREATER. (TYPICAL) |

PRELIMINARY DOCUMENT
NOT INTENDED FOR CONSTRUCTION, BIDDING, SALES OR ISSUANCE OF A PERMIT

NOBLES & ASSOCIATES L.L.C.
PROFESSIONAL ENGINEERS, LAND SURVEYORS, & DESIGNERS
562 COLUMBIA STREET, BOGALUSA, LA. 70427 P: 985-723-0380
800 MARINERS PLAZA, SUITE 808, MANDEVILLE, LA. 70448 P: 985-727-7221

NEW BUILDING FOR
SUPERIOR AVENUE CHURCH
SANCTUARY
HIGHWAY 21, BOGALUSA, LA 70427

| Rev. No. | Date | Description |
|---|---|---|
| | | |

ENGINEER OF RECORD
NAME GEORGE NOBLES
NUMBER 31767

MECHANICAL PLAN

Job No. E-00165
Dwn. SWL Chk. GBN
Date 01/25/2022 Rev. REVISED 2019

M101
Sheet 1 Of *

COPYRIGHT 2021 NOBLES & ASSOCIATES, L.L.C.
THESE DRAWINGS ARE THE SOLE PROPERTY OF NOBLES & ASSOCIATES L.L.C., AND ARE ISSUED AS INSTRUMENTS OF SERVICE. THESE DRAWINGS SHALL NOT BE COPIED, REPRODUCED OR USED IN ANY MANNER WITHOUT WRITTEN CONSENT OF NOBLES & ASSOCIATES L.L.C.

REVISED: Z:\ENGINEERING\NEW JOBS\E-00165\Superior Avenue Church\DWG\MEP\Purpose

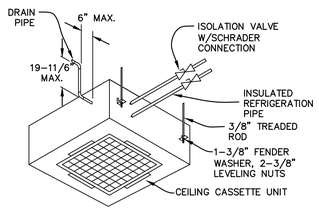


1 CEILING CASSETTE DETAIL
SCALE: NTS

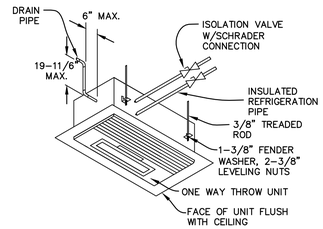


2 ONE WAY CEILING RECESSED DETAIL
SCALE: NTS

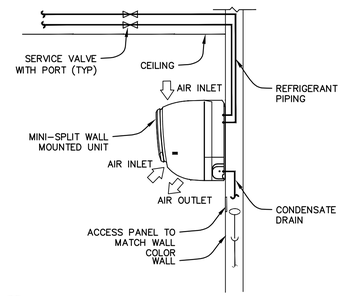


3 VRF WALL MOUNT DETAIL
SCALE: NTS

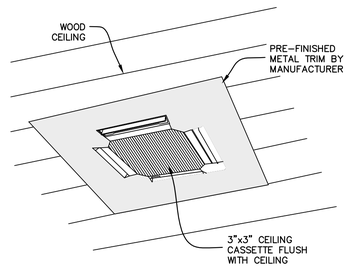


4 4-WAY CEILING CASSETTE W/ METAL TRIM DETAIL
SCALE: NTS

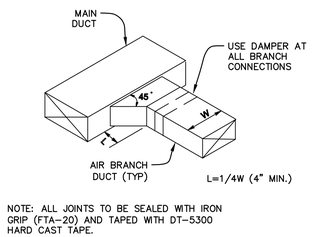


5 DUCT CONNECTION DETAIL
SCALE: NTS

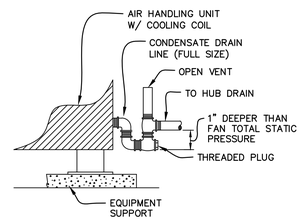


6 AIR HANDELING UNIT DRAIN PIPING DETAIL
SCALE: NTS

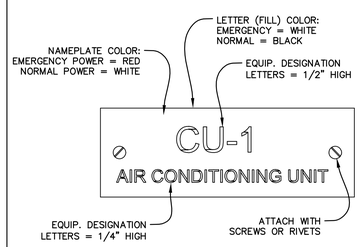


7 PLASTIC LAMINATE NAME PLATE
SCALE: NTS

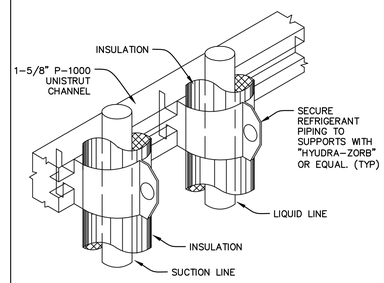


8 REFRIGERANT SUPPORT DETAIL
SCALE: NTS

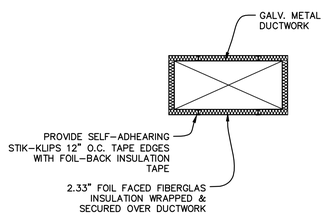


9 EXTERNAL DUCT INSULATION DETAIL
SCALE: NTS

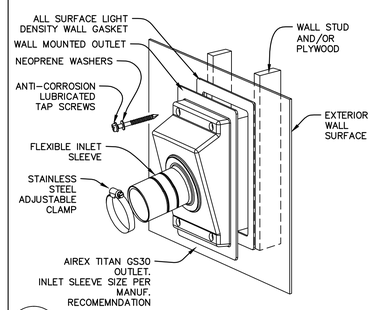


10 REFRIGERANT PIPE WALL PENETRATION DETAIL
SCALE: NTS

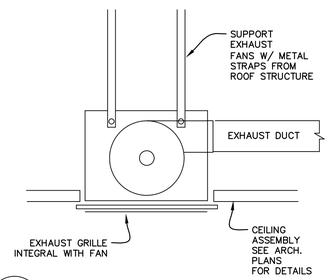


11 CEILING MOUNTED EXHAUST FAN DETAIL
SCALE: NTS

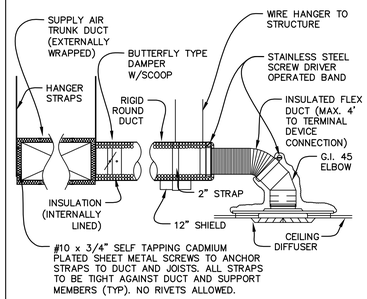


12 DIFFUSER/DUCT INSTALLATION DETAIL
SCALE: NTS

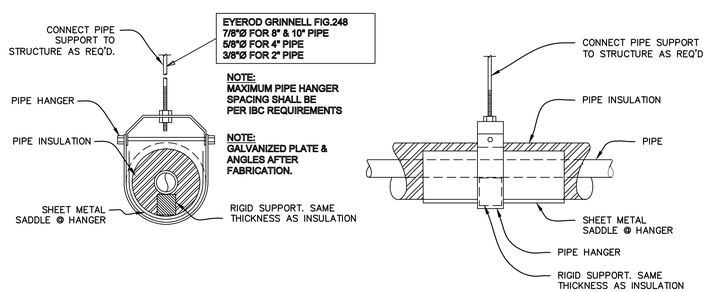


13 INSULATED PIPE HABNGER DETAIL
SCALE: NTS

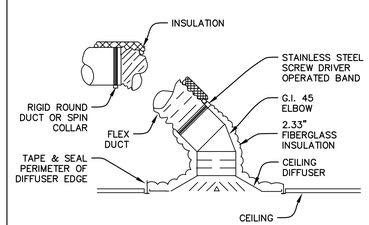


14 SUPPLY AIR OUTLET DETAIL
SCALE: NTS

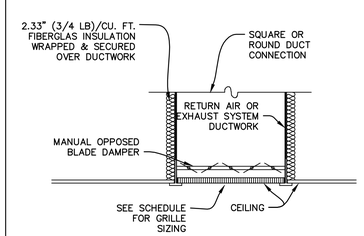


15 RETURN / EXAUST AIR GRILLE INSTALLATION DETAIL
SCALE: NTS

PRELIMINARY DOCUMENT
NOT INTENDED FOR CONSTRUCTION, BIDDING, SALES OR ISSUANCE OF A PERMIT

NOBLES & ASSOCIATES L.L.C.
PROFESSIONAL ENGINEERS, LAND SURVEYORS, & DESIGNERS
562 COLUMBIA STREET, BOGALUSA, LA. 70427 P: 985-723-0380
800 MARINERS PLAZA, SUITE 800, MANDEVILLE, LA. 70448 P: 985-727-7221

NEW BUILDING FOR
SUPERIOR AVENUE CHURCH
SANCTUARY
HIGHWAY 21, BOGALUSA, LA 70427

| Rev. No. | Date | Description |
|---|---|---|
| | | |

ENGINEER OF RECORD
NAME GEORGE NOBLES
NUMBER 31767

MECHANICAL DETAILS

Job No. E-00165
Dwn. SWL Chk. GBN
Date 01/25/2022 Rev. REV. 0

M102
Sheet 1 Of *

COPYRIGHT 2021 NOBLES & ASSOCIATES, L.L.C.
THESE DRAWINGS ARE THE SOLE PROPERTY OF NOBLES & ASSOCIATES L.L.C., AND ARE ISSUED AS INSTRUMENTS OF SERVICE. THESE DRAWINGS SHALL NOT BE COPIED, REPRODUCED OR USED IN ANY MANNER WITHOUT WRITTEN CONSENT OF NOBLES & ASSOCIATES L.L.C.

REVISED: Z:\ENGINEERING\NEW JOBS\E-00165\Superior Avenue Church\DWG\M102.dwg

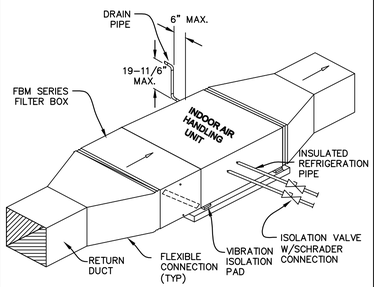


1 MEDIUM PRESSURE DUCT UNIT DETAIL SCALE: NTS

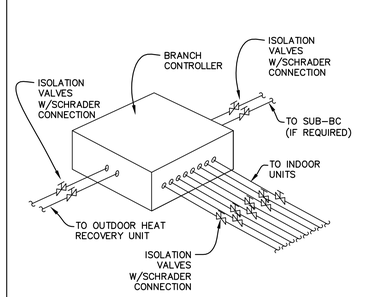


2 VRF BRANCH CONTROLLER DETAIL SCALE: NTS

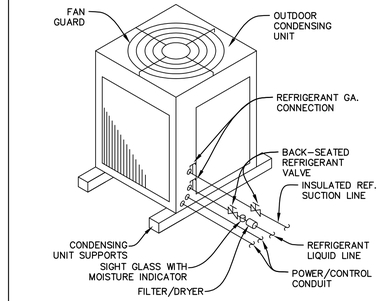


3 OUTDOOR VRF HEAT PUMP UNIT DETAIL SCALE: NTS

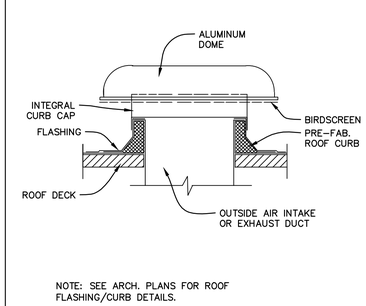


NOTE: SEE ARCH. PLANS FOR ROOF FLASHING/CURB DETAILS.

4 EXHAUST FAN DUCT FLASHING DETAIL SCALE: NTS

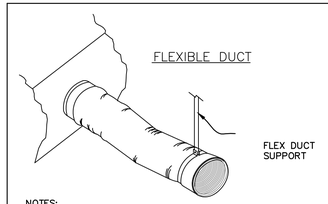


NOTES:
1. DUCT SHALL EXTEND STRAIGHT FOR SEVERAL INCHES FROM A CONNECTION BEFORE BENDING.
2. MAXIMUM LENGTH OF FLEXIBLE DUCT SHALL NOT EXCEED 30'-0"
3. SAG FOR FLEX DUCT SHALL NOT EXCEED 1/2" PER FOOT OF SUPPORT SPACING.

HANGER SIZING

| MAX. SIZE | HANGER | HOR. SUPPORT ANGLE | MAX. SPACING |
|---|---|---|---|
| 30" | 1"X18" GA. STRIP | 1 ½"x1 ½"x ⅛" | 10'-0" |
| 36" | ¼" ROUND ROD | 2" x 2" x ⅛" | 8'-0" |
| 48" | ¼" ROUND ROD | 2" x 2" x ⅛" | 8'-0" |
| 60" | 5/16" ROUND ROD | 2" x 2" x ⅛" | 8'-0" |
| 84" | ⅜" ROUND ROD | 2" x 2" x ⅛" | 8'-0" |

NOTES:
1. ALL SUPPLY AIR DUCTS SHALL BE WRAPPED EXTERNALLY AS REQUIRED BY MANUFACTURER.

NO POP RIVETS ALLOWED.

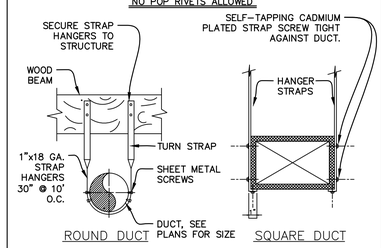


7 TYPICAL DUCT SUPPORT DETAIL SCALE: NTS

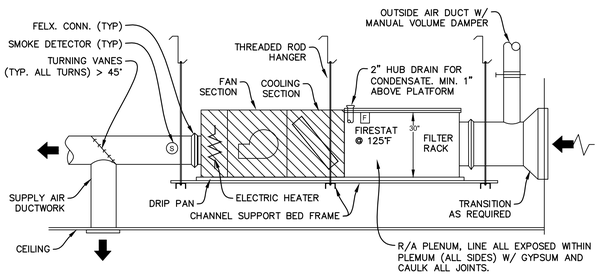


5 HORIZONTAL AIR HANDLING UNIT DETAIL SCALE: NTS

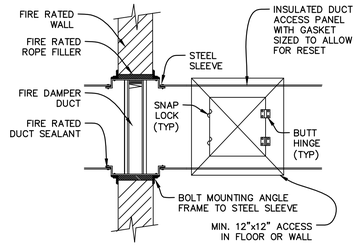


RECTANGULAR THRU-WALL

NOTE: FIRE DAMPER THRU FLOOR SIMILAR

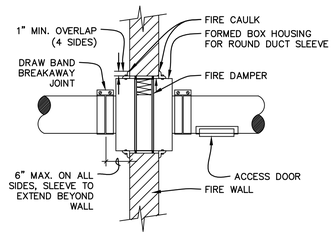


ROUND THRU-WALL

6 TYPICAL FIRE DAMPERS DETAIL SCALE: NTS

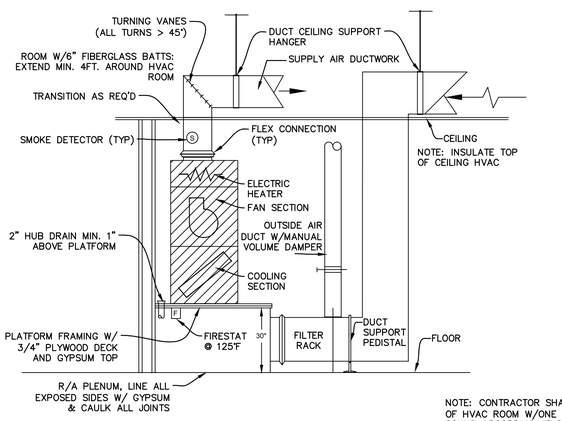


NOTE: CONTRACTOR SHALL LINE INSIDE OF HVAC ROOM W/ONE (1)IN. THICK SOUND ABSORBING #3 DENSITY SEMI-RIGID FIBERGLASS INSULATION BOARD. (TYPICAL ALL WALLS)

8 VERTICAL AIR HANDLING UNIT DETAIL SCALE: NTS

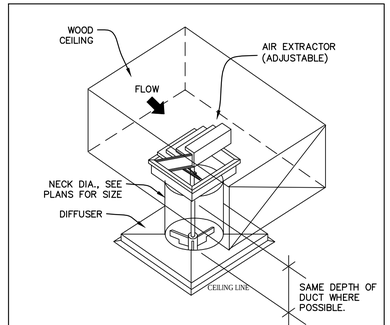


9 DIFFUSER DROP INSTALLATION DETAIL (TYP) SCALE: NTS

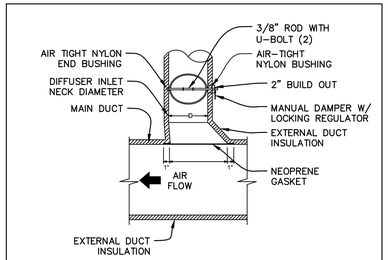


NOTES:
1. THIS DETAIL FOR EXTERNALLY INSULATED DUCTWORK.
2. EXTEND ROUND SHEETMETAL DUCTWORK AND INSULATION FROM MAIN DUCT, SO FLEXIBLE DUCT LENGTH DOES NOT EXCEED 6 FT.
3. FLEX DUCT: FLEXMASTER TYPE 8M-R6 OR EQUIVALENT.

10 EXTRACTOR & MANUAL DAMPER DETAIL SCALE: NTS

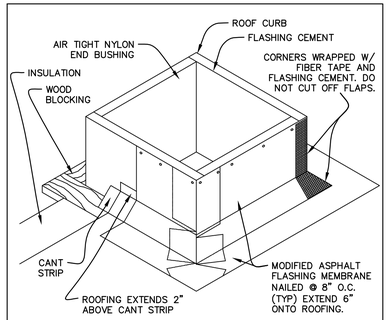


11 CURB DETAIL (TYP) SCALE: NTS

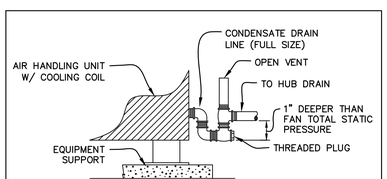


12 AIR HANDELING UNIT DRAIN PIPING DETAIL

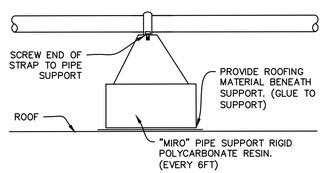


13 CONDENSATE PIPE SUPPORT DETAIL SCALE: NTS

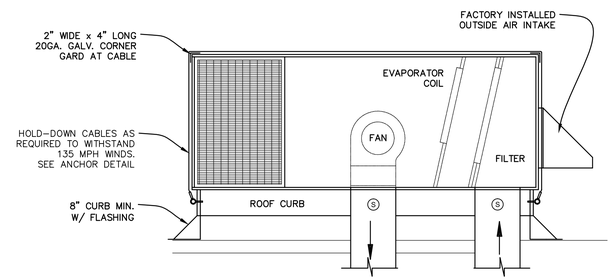


NOTE: CONDENSATE DRAIN TO BE PIPED TO TERMINATE AT ROOF DRAINAGE SYSTEM

14 ROOFTOP UNIT DETAIL SCALE: NTS

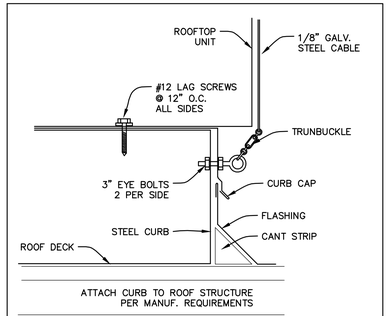


15 ANCHOR DETAIL (TYP) SCALE: NTS

PRELIMINARY DOCUMENT
NOT INTENDED FOR CONSTRUCTION, BIDDING, SALES OR ISSUANCE OF A PERMIT

NOBLES & ASSOCIATES L.L.C.
PROFESSIONAL ENGINEERS, LAND SURVEYORS, & DESIGNERS
562 COLUMBIA STREET, BOGALUSA, LA. 70427 P: 985-723-0380
800 MARINERS PLAZA, SUITE 800, MANDEVILLE, LA. 70448 P: 985-727-7221

NEW BUILDING FOR
SUPERIOR AVENUE CHURCH
SANCTUARY
HIGHWAY 21, BOGALUSA, LA 70427

| Rev. No. | Date | Description |
|---|---|---|
| | | |

ENGINEER OF RECORD
NAME GEORGE NOBLES
NUMBER 31767

MECHANICAL DETAILS

Job No. E-00165
Dwn. SWL Chk. GBN
Date 01/25/2022 Rev. REV. 0

M103
Sheet 1 Of *

COPYRIGHT 2021 NOBLES & ASSOCIATES, L.L.C.
THESE DRAWINGS ARE THE SOLE PROPERTY OF NOBLES & ASSOCIATES L.L.C., AND ARE ISSUED AS INSTRUMENTS OF SERVICE. THESE DRAWINGS SHALL NOT BE COPIED, REPRODUCED OR USED IN ANY MANNER WITHOUT WRITTEN CONSENT OF NOBLES & ASSOCIATES L.L.C.

REVISED: Z:\ENGINEERING\NEW JOBS\E-00165\Superior Avenue Church\DWG\M103.dwg Tuesday, January 25, 2022 - 1:45pm

COPYRIGHT 2021 NOBLES & ASSOCIATES, L.L.C.

# HVAC SPECIFICATIONS

1. CONTRACTOR SHALL FURNISH ALL LABOR, MATERIALS, EQUIPMENT, TOOLS, ETC., REQUIRED FOR THE COMPLETE INSTALLATION OF THE HEATING, VENTILATING AND AIR CONDITIONING SYSTEM AS DESIGNATED ON THE DRAWINGS, INCLUDING ALL NECESSARY PARTS, ACCESSORIES, ETC., REQUIRED BY STATE OR LOCAL CODES OR TO SATISFACTORILY COMPLETE THE INSTALLATION.

2. UNLESS NOTED OTHERWISE, ALL WORK SHOWN ON THE MECHANICAL DRAWINGS SHALL BE COMPLETED BY CONTRACTOR. ALL PLANS RELATING TO WORK UNDER THIS DIVISION OF THE SPECIFICATIONS ARE INTENDED AS DESIGN ONLY AND INDICATE THE GENERAL SCOPE OF WORK TO BE COMPLETED. THEY ARE NOT SHOP DRAWINGS AND SHOULD NOT BE USED AS SUCH.; THE DRAWINGS ARE DIAGRAMMATIC IN NATURE AND, EXCEPT WHERE DIMENSIONS ARE SHOWN, ARE NOT INTENDED TO SHOW THE EXACT LOCATION OF PIPES, DUCTWORK, OUTLETS, FIXTURES, OR EQUIPMENT. REFER TO BUILDING AND STRUCTURAL DRAWINGS FOR BUILDING DIMENSIONS.

3. ALL WORK SHALL BE PERFORMED IN ACCORDANCE WITH THE LATEST APPLICABLE STANDARDS. EQUIPMENT AND MATERIALS SHALL BE INSTALLED IN ACCORDANCE WITH THE MANUFACTURERS SPECIFICATIONS. AUXILIARY PIPING, ELECTRIC CONNECTIONS, ETC., RECOMMENDED BY THE MANUFACTURER OR REQUIRED FOR PROPER OPERATION SHALL BE FURNISHED AND INSTALLED AS NEEDED. A COPY OF THE MANUFACTURER'S INSTALLATION RECOMMENDATIONS SHALL BE MAINTAINED IN THE JOB SUPERINTENDENT'S OFFICE AND SHALL BE AVAILABLE TO THE ENGINEER'S REPRESENTATIVE ALL TIMES.

4. RECTANGULAR AND ROUND SHEET METAL DUCTWORK SHALL BE G90 GALVANIZED STEEL AND CONSTRUCTED PER APPLICABLE SMACNA STANDARDS. LONGITUDINAL SEAMS AND TRANSVERSE JOINTS SHALL BE SEALED USING UNITED MCGILL "DUCT SEALER". 3% LEAKAGE, PER ASHRAE, MAX. FLEXIBLE DUCT CONNECTORS SHALL HAVE SEAMLESS OUTSIDE JACKET VAPOR BARRIER, 1"x1#/CU.FT. INSULATION AND SOLID LINER. ROUND INSULATED FLEXIBLE DUCT CONNECTOR USED FOR RUNOUTS TO DIFFUSERS SHALL BE LIMITED TO LENGTHS PERMITTED BY CODE.

5. INSULATE ALL RECTANGULAR OUTSIDE AIR, SUPPLY AIR, AND RETURN AIR DUCTWORK WITH 1" THICK, 2# DENSITY DUCT LINER EQUAL TO FIBERGLASS. TRAVERSE DUCT JOINTS SHALL BE SEALED WITH MASTIC OR MASTIC PLUS TAPE. ROUND DUCT SHALL BE EXTERNALLY INSULATED WITH 2"THICK, 3/4# DENSITY DUCT WRAP EQUAL TO FIBERGLASS TYPE FRK. SEAL ALL JOINTS AIRTIGHT.

6. CONTRACTOR SHALL FURNISH AND INSTALL ALL STARTERS, DISCONNECTS AND CONTROL DEVICES FOR ALL H.V.A.C. EQUIPMENT. ELECTRICAL CONTRACTOR WILL FURNISH ALL POWER WIRING. CONTRACTOR SHALL FURNISH AND INSTALL ALL CONTROL WIRING WHICH SHALL BE INSTALLED IN CONDUIT.

7. GENERAL CONTRACTOR SHALL PROVIDE PENETRATIONS IN FLOORS AND EXTERIOR WALLS AS REQUIRED FOR INSTALLATION OF H.V.A.C. EQUIPMENT, PIPING OR DUCTWORK.

8. CONDENSATE DRAIN PIPE SHALL BE SCH. 40 P.V.C. INSULATED WITH 1/2" ARMAFLEX, OR EQUAL INSULATION. MIN. PIPE SIZE SHALL BE 1 1/4". CONDENSATE DRAINS OVER 25' IN LENGTH ARE CLASSIFIED AS INDIRECT WASTE SYSTEM AND SHALL BE TRAPPED AND VENTED IN ACCORDANCE WITH LOCAL CODES AND REQUIREMENTS. CONDENSATE DRAIN PIPING SHALL TERMINATE AT CONNECTION TO OPEN HUB WASTE RECEPTOR WITH AN AIR GAP FITTING OR WITH AN AIR GAP EQUAL TO TWICE THE SIZE OF THE CONDENSATE DRAIN PIPE.

9. UNOCCUPIED AMBIENT NOISE LEVEL FOR H.V.A.C. SYSTEM SHALL BE NO MORE THAN 25 dB AS MEASURED ON AN "A" WEIGHTED SCALE.

10. COMPLY WITH ALL SEISMIC BRACING REQUIREMENTS OF THE LATEST ADOPTED INTERNATIONAL BUILDING CODE. SEISMIC BRACING DEVICES SHALL BE SUBMITTED TO ENGINEER FOR REVIEW PRIOR TO INSTALLATION. CONTRACTOR SHALL EMPLOY A REGISTERED PROFESSIONAL ENGINEER TO DESIGN SEISMIC RESTRAINTS AS REQUIRED. SHOP DRAWINGS SHALL BEAR SEAL OF A PROFESSIONAL ENGINEER, LICENSED IN STATE, WITH MIN. FIVE YEARS EXPERIENCE IN DESIGN OF SEISMIC BRACING SYSTEMS. SEISMIC DRAWINGS SHALL BE SUBMITTED TO LOCAL CODE ENFORCEMENT FOR APPROVAL PRIOR TO INSTALLATION.

11. AIR DISTRIBUTION SHALL BE EQUAL TO KRUEGER, SQUARE CEILING OUTLETS SHALL BE 1400 (D.D.) KRUEGER EGC-5 (CRAR AND CEAR). PROVIDE OPPOSED BLADE DAMPERS. ALL ALUMINUM CONSTRUCTION. 25 DB MAXIMUM SOUND GENERATION.

12. CONTRACTOR SHALL ENSURE THAT COMPLETED WORK IS CORRECT, PRESENTABLE, APPROVED BY THE ENGINEER AND IN ACCORDANCE WITH THE SPECIFICATIONS. PAINT EXPOSED DUCTWORK INSIDE THE BUILDING PER ARCHITECT.

13. CONTRACTOR SHALL COORDINATE WITH OTHER TRADES REGARDING THE LOCATION AND SIZE OF PIPES, EQUIPMENT, FIXTURES, CONDUIT, DUCTS, OPENINGS, SWITCHES, OUTLETS, ETC., TO AVOID CONFLICTS AND DELAYS. ANY MODIFICATION/RELOCATION OF DUCTWORK, PIPING, OR EQUIPMENT REQUIRED TO AVOID CONFLICTS BECAUSE OF FAILED COMMUNICATION SHALL BE THE SOLE RESPONSIBILITY OF THE CONTRACTOR AND AT NO ADDITIONAL COST TO THE OWNER.

14. THE OWNER MAY CHANGE THE LOCATION OF ANY ITEM OR EQUIPMENT FIVE FEET AND ANY PIPING, DUCTWORK, CONDUIT, ETC., TEN FEET IN ANY DIRECTION WITHOUT EXTRA CHARGE, PROVIDED SUCH CHANGES ARE MADE PRIOR TO INSTALLATION OF MECHANICAL EQUIPMENT AND DO NOT INTERFERE WITH STRUCTURAL COMPONENTS.

15. REFERENCES TO CONTRACTORS IN SPECIFICATIONS AND DRAWINGS SHALL REFER TO THE RESPECTIVE TRADE CONTRACTOR PERFORMING THAT PORTION OF THE WORK.

16. SHOULD THERE BE ANY DISCREPANCIES OR A QUESTION OF INTENT, REFER THE MATTER TO THE ENGINEER FOR A DECISION BEFORE ORDERING ANY EQUIPMENT OR MATERIALS, OR BEFORE STARTING ANY RELATED WORK.

17. WHERE WORK CONNECTS TO THAT OF ANOTHER TRADE OR TO PIPING OR EQUIPMENT IN PLACE, FIELD MEASUREMENTS SHALL BE MADE TO MAKE CONNECTING WORK COME TRUE AND LINE UP WITH THE ITEM BEING CONNECTED.

18. ITEMS AND ACCESSORIES OR DEVICES REQUIRED FOR THE COMPLETE AND PROPER INSTALLATION AND OPERATION OF ANY SYSTEM SHALL BE PROVIDED BY THE CONTRACTOR FOR SUCH SYSTEM, WHETHER OR NOT THEY ARE SPECIFICALLY CALLED FOR BY THE SPECIFICATIONS OR DRAWINGS.

19. CAREFULLY CHECK AND COORDINATE THE LOCATION AND LEVEL OF PIPES, DUCTS, ETC., RUN PRELIMINARY LEVELS AND CHECK WITH OTHER CONTRACTORS SO THAT CONFLICTS IN ALL LOCATIONS MAY BE AVOIDED.

20. ALL MATERIALS SHALL BE NEW AND OF THE QUALITY SPECIFIED. APPARATUS AND MATERIALS USED IN THIS WORK WHICH ARE SUBJECT TO APPROVAL BY UNDERWRITERS (UL) SHALL BEAR THE UNDERWRITERS LABEL OF APPROVAL.

21. MANUFACTURER'S TRADE NAMES OR CATALOG NUMBERS USED IN THESE SPECIFICATIONS AND INDICATED ON THE DRAWINGS ARE NOT TO BE CONSIDERED AS PROPRIETARY. THEIR PURPOSE IS TO DENOTE TYPE, SIZE, QUALITY, AND DESIGN OF EQUIPMENT.

22. WHERE EQUIPMENT IS SPECIFIED AS "OR EQUAL", IT SHALL MEAN EQUAL IN THE OPINION OF THE ENGINEER.

23. THE CONTRACTOR IS FREE TO OFFER FOR CONSIDERATION SUBSTITUTE ITEMS OF EQUIVALENT TYPE, SIZE, QUALITY, AND PERFORMANCE AFTER THE CONTRACT IS SIGNED; HOWEVER, HE SHALL BE PREPARED TO FURNISH SPECIFIED MATERIALS AND EQUIPMENT WHERE SUBSTITUTIONS ARE REJECTED ON HIS ORIGINAL SUBMITTAL.

24. SHOULD ANY PART OF THE PLANS OR SPECIFICATIONS BE FOUND TO BE IN CONFLICT WITH APPLICABLE CODES OR ORDINANCES, THIS CONTRACTOR SHALL NOTIFY THE ENGINEER PRIOR TO SUBMITTING HIS BID.

25. A LICENSED CONTRACTOR SHALL MAKE APPLICATION TO THE LOCAL BUILDING CODE ENFORCEMENT OFFICIALS TO OBTAIN INSPECTION PERMITS REQUIRED, AND SHALL PAY NECESSARY FEES FOR SAME. HE SHALL, AT THE CONCLUSION OF THE INSTALLATION, SECURE A CERTIFICATE OF INSPECTION, PROPERLY SIGNED BY THE CONTROLLING BUILDING CODE ENFORCEMENT DEPARTMENT, WHICH SHALL STATE THAT RULES HAVE BEEN COMPLIED WITH AND THAT THE WORK IS SATISFACTORY. AT PROJECT COMPLETION, THIS CONTRACTOR SHALL SUBMIT CERTIFICATE OF INSPECTION FOR DELIVER TO THE OWNER.

26. MATERIALS AND EQUIPMENT SHALL BE PROVIDED BY FIRMS REGULARLY ENGAGED IN THE MANUFACTURE OF MECHANICAL EQUIPMENT OF TYPES AND SIZES SPECIFIED HEREIN WHOSE PRODUCTS HAVE BEEN IN SATISFACTORY USE IN SIMILAR SERVICE FOR NOT LESS THAN FIVE YEARS.

27. <u>OPERATING MAINTENANCE AND SERVICE MANUALS:</u>
BEFORE COMPLETING WORK AND BEFORE REQUESTING FINAL PAYMENT, THIS CONTRACTOR SHALL COMPILE AND DELIVER FOUR INDEXED, HARD COVER, THREE-RING BINDERS CONTAINING:
   I. NAMES, ADDRESSES, AND TELEPHONE NUMBERS OF THIS CONTRACTOR AND ALL EQUIPMENT SUPPLIERS, SYSTEMS INSTALLATION SUBCONTRACTORS, AND SERVICE COMPANIES.
   II. MECHANICAL INSTALLATION DRAWINGS (AS-BUILT) WITH ITEMS IDENTIFIED BY NAME/MARK/NUMBER.
   III. MANUFACTURER'S DESCRIPTIVE LITERATURE, FINAL APPROVED SHOP DRAWINGS, PERFORMANCE DATA, CURVES, RATINGS, DIAGRAMS, SPARE PARTS AND REPLACEMENT PARTS LISTS, INSTALLATION AND OPERATING INSTRUCTIONS, MAINTENANCE AND SERVICE MANUALS FOR:
      A. EACH ITEM OF EQUIPMENT
      B. VALVES AND SPECIALTIES
      C. CONTROLS
      D. SPECIAL ITEMS
   IV. WHERE DIAGRAMS ARE TOO LARGE FOR THE BINDER, ARRANGE MANILA POCKETS WITH REINFORCED HOLES TO HOLD FOLDED DRAWINGS.
   V. STEP-BY-STEP PROCEDURES FOR STARTING AND STOPPING THE SYSTEMS, NORMAL OPERATION AND MAINTENANCE INSTRUCTIONS.

28. CONTRACTOR SHALL DESIGNATE AND MAINTAIN A COMPLETE UP-TO-DATE SET OF CONTRACT DRAWINGS, PRINTS, AND SPECIFICATION FOR RECORDING CHANGES MAKE TO THE DRAWINGS AND SPECIFICATIONS DURING THE CONSTRUCTION PHASE OF THIS PROJECT. THESE DRAWINGS SHALL BE AVAILABLE AT THE JOB SITE FOR REVIEW BY THE ENGINEER, ARCHITECT, AND THE OWNER. DRAWINGS SHALL BE MAINTAINED IN A NEAT CONDITION AND SHALL CLEARLY SHOW ANY CHANGES FROM ORIGINAL CONTRACT DRAWINGS AND SPECIFICATIONS.

29. CONTRACTOR SHALL PREPARE, UPON COMPLETION OF THE PROJECT, FINAL RECORD DRAWINGS ON REPRODUCIBLE DRAFTING MEDIA TO THE SAME SCALE AS THE CONTRACT DRAWINGS SHOWING THE CHANGES MADE TO THE DRAWINGS DURING THE CONSTRUCTION PHASE OF THIS PROJECT, AND THE DRAWINGS SHALL SHOW EXACT INSTALLED LOCATIONS AND SIZES OF PIPING, DUCTWORK AND EQUIPMENT INSTALLED BY THIS CONTRACTOR. UNDERGROUND WORK SHALL BE DIMENSIONED FROM A REFERENCE SUCH AS A WALL OR COLUMN CENTER LINE. MARKED UP PRINTS OF CONTRACT DRAWINGS WILL NOT BE ACCEPTED AS FINAL RECORD DRAWINGS.

30. SYSTEMS INCLUDED UNDER THIS DIVISION OF THE SPECIFICATIONS WILL NOT BE ACCEPTED UNTIL ACCEPTANCE TESTS HAVE BEEN MADE, FINAL TESTING AND BALANCING WORK IS COMPLETE, AND THE INSTALLATION IS OPERATING PROPERLY.

31. UPON COMPLETION OF ALL WORK AND RELATED TESTS, AND AT SUCH TIME AS DESIGNATED BY THE ENGINEER, THE CONTRACTOR SHALL PROVIDE NECESSARY SKILLED PERSONNEL TO OPERATE THE ENTIRE SYSTEM FOR A PERIOD OF ONE DAY OF EIGHT (8) HOURS. DURING THIS TIME, THIS CONTRACTOR SHALL FULLY INSTRUCT THE OWNER'S REPRESENTATIVES IN THE COMPLETE OPERATION, ADJUSTMENT, AND MAINTENANCE OF THE EQUIPMENT AND SYSTEMS.

32. THE CONTRACTOR SHALL GUARANTEE ALL WORK AGAINST DEFECTS IN MATERIALS AND WORKMANSHIP FOR A PERIOD OF ONE YEAR FROM DATE OF ACCEPTANCE BY THE OWNER. THIS GUARANTEE SHALL BE PRESENTED TO THE OWNER IN WRITING AND ALL DEFECTS DEVELOPING WITHIN THIS STATED PERIOD SHALL BE REMEDIED TO THE FULL SATISFACTION OF THE OWNER BY CONTRACTOR AT NO ADDITIONAL COST TO THE OWNER.

33. THE ONE-YEAR GUARANTEE FOR ITEMS OR EQUIPMENT THAT THE OWNER ELECTS TO BEGIN USING FOR HIS BENEFIT BEFORE THE COMPLETION OF THE ENTIRE PROJECT SHALL BEGIN AT THE DATE OF "BENEFICIAL USE" BY THE OWNER. THIS DATE OF "BENEFICIAL USE" SHALL BE ESTABLISHED JOINTLY BY THE ENGINEER, ARCHITECT, CONTRACTOR AND THE OWNER. THE CONTRACTOR SHALL PREPARE A LETTER STATING THAT THE OWNER HAS REQUESTED "BENEFICIAL USE" AND SHALL BE SIGNED BY THE OWNER, THIS CONTRACTOR AND THE ARCHITECT.

34. IN ORDER TO MAINTAIN THE INDOOR AIR QUALITY FOR THIS FACILITY, THE OWNER SHOULD PROVIDE A CONTINUING MAINTENANCE PROGRAM FOR THE HEATING, VENTILATING AND AIR CONDITIONING (H.V.A.C.) SYSTEMS. THE H.V.A.C. SYSTEMS FOR THIS FACILITY WERE DESIGNED TO MEET OR EXCEED THE INDOOR AIR QUALITY REQUIREMENTS OF THE 2012 IMC.

35. SHOULD SPACE USAGE OR OCCUPANCY CHANGE IN THE FUTURE, IT IS THE OWNER'S RESPONSIBILITY TO MAINTAIN COMPLIANCE WITH APPLICABLE VENTILATION AND/OR INDOOR AIR QUALITY STANDARDS.

36. FUEL GAS PLUMBING SHALL BE SCHEDULE 40 BLACK STEEL, UNDERGROUND GAS PIPE SHALL BE COATED AND WRAPPED TO PROVIDE CATHODIC PROTECTION PER LOCAL CODE AUTHORITY AMENDMENT TO THE STANDARD GAS CODE, GAS PIPE IN CONCEALED SPACES REGARDLESS OF PRESSURE SHALL BE WELDED. ALL PIPE HANDLING PRESSURE ABOVE 1 PSI SHALL BE WELDED. GAS PIPING ABOVE GROUND SHALL BE BONDED TO A GROUNDING ELECTRODES SYSTEM. MINIMUM GAS PIPE SIZE SHALL BE 1" WHERE CONNECTION TO EQUIPMENT IS LESS THAN 1", THE PIPE SIZE CAN BE REDUCED TO 1/2" WITH MAX. LENGTH TO BE 1'-0". EACH CONNECTION TO GAS FIRED EQUIPMENT SHALL HAVE SHUT-OFF VALVE AND A UNION CONNECTION.

37. IONIZATION SMOKE DETECTORS SHALL BE PLACED IN SUPPLY AIR AND RETURN AIR DUCTWORK TO SHUT DOWN EQUIPMENT UPON DETECTION OF SMOKE. CONTRACTOR TO PROVIDE ALL WIRING FOR ALARM NOTIFICATION AND FAN SHUTDOWN. "TRUEALARM" SMOKE DETECTORS WITH HOUSING FOR STAND-A-LONE OPERATION. PROVIDE SIMPLEX 4098-9842 CONTROL STATION FOR AUDIBLE AND VISIBLE ALARM IN NORMALLY OCCUPIED SPACE.

38. DRAWINGS ARE INTENDED AS DESIGN ONLY AND INDICATE THE GENERAL SCOPE OF WORK TO BE PERFORMED. THE PLANS DO NOT CONSTITUTE SHOP DRAWINGS AND SHOULD NOT BE USED AS SUCH. DRAWINGS ARE DIAGRAMMATIC AND ARE NOT INTENDED TO SHOW THE EXACT LOCATION OF PIPES, DUCTWORK, OUTLETS, FIXTURES, OR EQUIPMENT. THE CONTRACTOR(S) AGREE TO CAREFULLY STUDY THE CONTRACT DOCUMENTS AND REPORT (IN WRITING) ANY DEFICIENCIES THE CONTRACTOR(S) MAY DISCOVER. THE CONTRACTOR FURTHER AGREES TO REQUIRE EACH SUBCONTRACTOR TO STUDY THE DOCUMENTS AND REPORT ANY DEFICIENCIES DISCOVERED. THE CONTRACTOR SHALL RESOLVE ALL REPORTED DEFICIENCIES REGARDING THE DIVISION-15 DESIGN WORK WITH THE CONTRACTOR'S OWN EMPLOYEES. IF DEFICIENCIES CANNOT BE RESOLVED BY THE DESIGN PROFESSIONAL AND THE CONTRACTOR(S) WITHOUT ADDITIONAL TIME OR ADDITIONAL EXPENSE, THE DESIGN PROFESSIONAL AND THE CONTRACTOR SHALL SO INFORM THE OWNER AND/OR THE ARCHITECTURAL DESIGN PROFESSIONAL IN WRITING. ANY WORK THAT IS PERFORMED RELATED TO THE EFFICIENCIES PRIOR TO RECEIPT OF INSTRUCTIONS FROM THE DESIGN PROFESSIONAL, THE OWNER OR ARCHITECTURAL DESIGN PROFESSIONAL WILL BE DONE AT THE CONTRACTOR'S RISK. REFER TO BUILDING AND STRUCTURAL DRAWINGS FOR DIMENSIONS OF BUILDING SPACES.

39. HEATING/COOLING UNITS SHALL BE FURNISHED WITH PROGRAMMABLE REMOTE SENSING THERMOSTATS (24VOLT) WITH CLEAR PLASTIC COVERS. WHEN UNITS ARE IN THE UNOCCUPIED MODE, THE O.S.A. DAMPER SHALL CLOSE AND REMAIN CLOSED EVEN IF THE UNIT HAS TO RUN TO MAINTAIN UNOCCUPIED MODE TEMPERATURE SET POINT, S.A. FAN SHALL RUN CONTINUOUS DURING OCCUPIED TIMES AND SHALL CYCLE AS REQUIRED DURING UNOCCUPIED TIMES. PROVIDE TEMPERATURE SENSORS.

40. WITHIN 21 DAYS FROM THE AWARD OF THE CONTRACT, CONTRACTOR(S) SHALL DELIVER EQUIPMENT SUBMITTALS TO THE DESIGN PROFESSIONAL FOR REVIEW. SUBMITTALS SHALL INCLUDE SEVEN COPIES WITH DESCRIPTIVE LITERATURE, CUTS, AND OPERATING DATA ON EACH ITEM OF EQUIPMENT AND MATERIALS BEING SUPPLIED – EITHER AS SPECIFIED OR AS AN EQUAL TO THOSE SPECIFIED. SUBMITTALS SHALL BE BOUND IN THREE-RING BINDERS AND SHALL INCLUDE A COVER SHEET FOR EACH ITEM LISTING, THE IDENTIFYING SYMBOL OR MARK, EQUIPMENT TYPE, CAPACITIES, STANDARD FEATURES, AND OPTIONS THAT ARE TO BE FURNISHED AS SPECIFIED. LISTING SHALL BE IN SIMILAR ORDER TO SCHEDULE ON DRAWINGS OR TO DESCRIPTION GIVEN IN SPECIFICATIONS. THREE COPIES OF THE FINAL REVIEWED SUBMITTAL SHALL BE RETAINED BY THE CONTRACTOR(S) FOR INSERTION TO THE OPERATING AND MAINTENANCE MANUALS FOR DELIVERY TO THE OWNER. SUBS SHALL FURNISH THE CONTRACTOR A LIST OF ALL ITEMS OF HVAC EQUIPMENT REQUIRING POWER, INTERLOCK AND CONTROL WIRING TO BE FURNISHED. THIS LISTING SHALL BE SUBMITTED TO THE DESIGN PROFESSIONAL FOR REVIEW.

41. SUBS SHALL EXAMINE SUBMITTAL DATA BEFORE PRESENTING THEM TO THE DESIGN PROFESSIONAL FOR REVIEW. CONTRACTORS SHALL INDICATE BY THEIR SIGNATURE AND DATE ON THE SUBMITTALS THAT THE SUBMITTALS COMPLY WITH REQUIREMENTS OF THE SPECIFICATIONS AND THAT THE EQUIPMENT THEY PROPOSE TO USE WILL FIT PROPERLY INTO THE SPACE PROVIDED WITH ADEQUATE CLEARANCE FOR SERVICE AND MAINTENANCE. THE DESIGN PROFESSIONAL SHALL NOT BE RESPONSIBLE FOR ANY DEVIATIONS FROM THE CONTRACT DOCUMENTS NOT PREVIOUSLY APPROVED IN WRITING. THE DESIGN PROFESSIONAL'S REVIEW AND APPROVAL OF SUBMITTALS AND SHOP DRAWINGS IS ONLY FOR THE LIMITED PURPOSE OF CHECKING THE SAME FOR CONFORMITY WITH DESIGN CONCEPT OF THE WORK AS ESTABLISHED IN THE CONTRACT DOCUMENTS. MATTERS SUCH AS DIMENSIONS, WEIGHTS OR GAUGES, FABRICATION PROCESSES, COORDINATION WITH OTHER TRADES, QUANTITIES, PERFORMANCE OF EQUIPMENT AND SYSTEMS DESIGNED BY CONTRACTOR(S), TECHNIQUES, SEQUENCE OF OPERATION, PROCEDURES, SAFETY PRECAUTIONS, ETC., SHALL BE THE SOLE RESPONSIBILITY OF CONTRACTOR(S). THE DESIGN PROFESSIONAL'S REVIEW OF A SPECIFIC ITEM SHALL NOT INDICATE APPROVAL OF AN ASSEMBLY OF WHICH THE ITEM IS A COMPONENT, OR IN WHICH IT FUNCTIONS.

42. THE DESIGN PROFESSIONAL'S SERVICES DO NOT INCLUDE CONSTRUCTION PHASE SERVICE. THE DESIGN PROFESSIONAL AND/OR THE OWNER WILL PROVIDE THE CONSTRUCTION PHASE SERVICES. THE CONTRACTOR SHALL BE AWARE THAT THE DESIGN PROFESSIONAL AND/OR THE OWNER ARE SOLELY RESPONSIBLE FOR THE INTERPRETATIONS OF THE CONTRACT DOCUMENTS AND OBSERVATIONS OF THE WORK OF CONTRACTORS MUST BE AUTHORIZED AND APPROVED BY THE DESIGN PROFESSIONAL AND/OR THE OWNER BEFORE THE DEVIATION CAN BE INCORPORATED INTO THIS PROJECT. CONTRACTORS SHALL BE HELD LIABLE FOR ALL DEVIATIONS FROM THE CONTRACT DOCUMENTS, RECORDED OR UNRECORDED, THAT HAVE NOT BEEN AUTHORIZED AND APPROVED BY THE DESIGN PROFESSIONAL AND/OR THE OWNER.

43. BEFORE BALANCING THE SYSTEM, THE FOLLOWING STEPS SHOULD BE PERFORMED:

43.1. REVIEW DRAWINGS AND SPECIFICATIONS, AND BECOME THOROUGHLY ACQUAINTED WITH THE DESIGN INTENT. OBTAIN COPIES OF APPROVED SHOP DRAWINGS OF ALL AIR HANDLING EQUIPMENT, OUTLETS (SUPPLY, RETURN, AND EXHAUST), AND TEMPERATURE CONTROL DIAGRAMS INCLUDING PERFORMANCE CURVES. COMPARE DESIGN REQUIREMENTS WITH SHOP DRAWING CAPACITIES. COMPARE DESIGN TO INSTALLED EQUIPMENT AND FIELD INSTALLATION. WALK THE SYSTEM FROM THE AIR-HANDLING EQUIPMENT TO TERMINAL UNITS TO DETERMINE VARIATIONS OF INSTALLATION FROM DESIGN. CHECK DAMPERS (BOTH VOLUME AND FIRE) IN OPEN AND LOCKED POSITIONS AND TEMPERATURE CONTROLS FOR COMPLETENESS OF INSTALLATION BEFORE STARTING FANS.

43.2. PREPARE TEST REPORT FOR BOTH FANS AND OUTLETS – OBTAIN MANUFACTURER'S OUTLET FACTORS AND RECOMMENDED TEST PROCEDURE. A SUMMATION OF REQUIRED OUTLET VOLUMES PERMITS A CROSS-CHECKING WITH REQUIRED FAN VOLUMES. DETERMINE THE BEST LOCATION IN THE MAIN AND BRANCH DUCTWORK FOR THE MOST ACCURATE DUCT TRAVERSES. PLACE ALL OUTLET DAMPERS IN THE FULL OPEN POSITION, PREPARE SCHEMATIC DIAGRAMS OF SYSTEM AS-BUILT DUCTWORK AND PIPING LAYOUTS TO FACILITATE REPORTING. CHECK FILTERS FOR CLEANLINESS AND PROPER INSTALLATION (NO AIR BYPASS). IF SPECIFICATIONS REQUIRE, ESTABLISH PROCEDURE TO SIMULATE DIRTY FILTERS. FOR VARIABLE VOLUME AIR SYSTEMS, DEVELOP A PLAN TO SIMULATE DIVERSITY.

43.3. FANS (SUPPLY, RETURN, AND EXHAUST) MUST BE OPERATIONAL PRIOR TO CHECKING THE FOLLOWING ITEMS:
- MOTOR AMPERAGE AND VOLTAGE TO GUARD AGAINST OVERLOAD.
- FAN ROTATION AND FUNCTIONALITY OF STATIC PRESSURE LIMIT SWITCH.
- MANUAL DAMPERS FOR PROPER POSITION.
- AIR AND WATER CONTROLS FOR PROPER TEMPERATURE CONTROL.
- AIR LEAKS IN THE CASING AND IN THE SCARFING AROUND COILS AND FILTER FRAMES
- NOTE THE LOCATIONS WHERE PIPING ENTERS THE CASING TO ENSURE THAT ESCUTCHEONS ARE CORRECT. DO NOT RELY ON PIPE INSULATION TO SEAL THESE OPENINGS BECAUSE THE INSULATION MAY SHRINK.
- IN PREFABRICATED UNITS, CHECK THAT PANEL-FASTENING HOLES ARE FILLED TO PREVENT WHISTLING.

44. PENETRATIONS THROUGH FIRE RATED WALL, CEILINGS AND FLOORS.
INSULATED AND UNINSULATED PIPE PENETRATING FIRE RATED WALLS SHALL HAVE A VOID AROUND PIPE FILLED WITH "3M" FIRE PROTECTION PRODUCTS "CP 25W+CAULK", APPLY FIRE RATED CAULK PER "3M" SYSTEM REQUIREMENTS. PIPE SHALL BE RIGIDLY SUPPORTED ON BOTH SIDES OF WALL. CONTRACTOR SHALL SUBMIT TO THE ENGINEER FOR APPROVAL THE "UL FIRE RESISTANCE DIRECTORY" CONTROL NUMBER SELECTED FOR FIRE STOP APPLICATION.

45. INSULATED AND UNISULATED DUCTS, LESS THAN 100 SQUARE INCHES IN CROSS SECTION AREA, PENETRATING 1 HOUR FIRE RATED WALLS SHALL HAVE VOID AROUND DUCT, FILLED WITH "3M" FIRE PROTECTION PRODUCTS "CP 25W+CAULK, APPLY FIRE RATED CAULK PER "3M" SYSTEM REQUIREMENTS BEFORE APPLYING CAULK, THE VOID AROUND DUCT SHALL BE FILLED WITH MINERAL WOOL BATT INSULATION, AFTER CAULK IS APPLIED. 16 GAUGE RETAINING ANGLES SHALL BE ATTACHED TO THE DUCT AND THE WALL, ANGLE TO EXTEND ALONG WALL 1" AND ALONG DUCT 2". DUCT SHALL EXTEND 5' BOTH SIDES OF WALL. CONTRACTOR SHALL SUBMIT TO THE ENGINEER FOR APPROVAL, THE "UL FIRE RESISTANCE DIRECTORY" CONTROL NUMBER SELECTED FOR FIRE STOP APPLICATION.

46. DUCTS LARGER THAN 100 SQUARE INCHES CROSS SECTION AREA, PENETRATING FIRE RATED WALLS SHALL PENETRATE THE RATED WALL THROUGH AN APPROVED UL LABELED FIRE DAMPER. THE VOID AT WALL AROUND FIRE DAMPER FRAME SHALL BE FIRE STOPPED SIMILAR TO ABOVE REQUIREMENTS. CONTRACTOR SHALL SUBMIT TO THE ENGINEER FOR APPROVAL, THE UL FIRE DAMPER ASSEMBLY AND THE "UL FIRE RESISTANCE DIRECTORY" CONTROL NUMBER SELECTED FOR FIE STOP APPLICATION.

47. ALL ROOF MOUNTED EQUIPMENT AND ROOF CAPS SHALL BE SECURED IN SUCH A MANNER AS TO WITHSTAND A 110 MPH WIND LOAD. SUBMIT MOUNTING METHODS AND COMPONENTS TO ENGINEER FOR REVIEW PRIOR TO INSTALLATIONS.

48. INSTALL ADJUSTABLE DAMPERS IN DUCTWORK AHEAD OF DIFFUSERS. EACH DIFFUSER SHALL HAVE ONE DAMPER TO BALANCE AIR FLOW OF SYSTEM

49. SEE UNIT SCHEDULE FOR UNIT DETAILS

PRELIMINARY DOCUMENT
NOT INTENDED FOR CONSTRUCTION,
BIDDING, SALES OR ISSUANCE OF A PERMIT

NOBLES & ASSOCIATES L.L.C.
PROFESSIONAL ENGINEERS, LAND SURVEYORS, & DESIGNERS
562 COLUMBIA STREET, BOGALUSA, LA. 70427 P: 985-723-0380
800 MARINERS PLAZA, SUITE 100, MANDEVILLE, LA. 70448 P: 985-727-7221

NEW BUILDING FOR
SUPERIOR AVENUE CHURCH
SANCTUARY
HIGHWAY 21, BOGALUSA, LA 70427

| Rev. No. | Date | Description |
|---|---|---|
| | | |

ENGINEER OF RECORD
NAME GEORGE NOBLES
NUMBER 31767

MECHANICAL NOTES

Job No. E-00165
Dwn. SWL Chk. GBN
Date 01/25/2022 Rev. REV. 0

M104
Sheet 11 Of *

THESE DRAWINGS ARE THE SOLE PROPERTY OF NOBLES & ASSOCIATES L.L.C., AND ARE ISSUED AS INSTRUMENTS OF SERVICE. THESE DRAWINGS SHALL NOT BE COPIED, REPRODUCED OR USED IN ANY MANNER WITHOUT WRITTEN CONSENT OF NOBLES & ASSOCIATES L.L.C.

REVISED: Z:\ENGINEERING\NEW JOBS\E-00165\Superior Avenue 08\dwg\DWG\Multipurpose

COPYRIGHT 2021 NOBLES & ASSOCIATES, L.L.C.

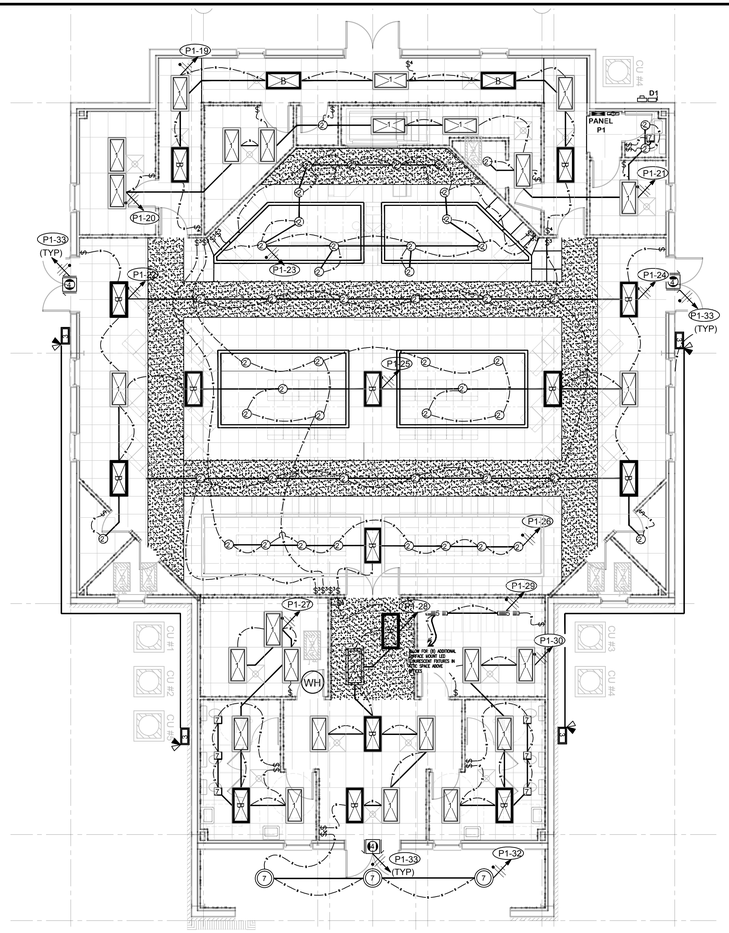


1 E101 LIGHTING PLAN

SCALE: 3/16"=1'

| | | | |
|---|---|---|---|
| PANEL | D1 | FEEDER | |
| FED FROM | METER | NUMBER OF CONDUITS | 2 |
| # CIRCUITS | 24 | FEEDER CONDUIT | 2" |
| H VOLTAGE | 240 | WIRE SIZE L1 | #4/0 |
| LOW VOLTAGE | 120 | WIRE SIZE L2 | #4/0 |
| PHASE | 1 | | |
| DESIGN LOAD AMPS | 399 | WIRE SIZE NEUTRAL | #4/0 |
| NEUTRAL BUS | YES | WIRE SIZE GROUND | #3 |
| GROUND BUS | YES | | |
| AVAILABLE FAULT CURRENT AT THIS PANEL | 4,888 | | |
| MAIN BREAKER SIZE AMPS | 400 | | |

| # | BKR | CIRCUIT DESCRIPTION | H | I | VA | | VA | I | H | CIRCUIT DESCRIPTION | BKR | # |
|---|---|---|---|---|---|---|---|---|---|---|---|---|
| 1 | 200A-2P | PANEL P1 | | C | 12,000 | L1 | 2,850 | M | | COND UNIT 1 | 50A-2P | 2 |
| 3 | XX | XX | | C | 11,700 | L2 | 2,650 | M | | XX | XX | 4 |
| 5 | 60A-2P | AHU-1 | | M | 3,980 | L1 | 2,650 | M | | COND UNIT 2 | 50A-2P | 6 |
| 7 | XX | XX | | M | 3,980 | L2 | 2,650 | M | | XX | XX | 8 |
| 9 | 60A-2P | AHU-2 | | M | 3,980 | L1 | 2,650 | M | | COND UNIT 3 | 50A-2P | 10 |
| 11 | XX | XX | | M | 3,980 | L2 | 2,650 | M | | XX | XX | 12 |
| 13 | 60A-2P | AHU - 3 | | M | 3,980 | L1 | 2,650 | M | | COND UNIT 4 | 50A-2P | 14 |
| 15 | XX | XX | | M | 3,980 | L2 | 2,650 | M | | XX | XX | 16 |
| 17 | 60A-2P | AHU-4 | | M | 3,980 | L1 | 1,980 | M | | COND UNIT 5 | 50A-2P | 18 |
| 19 | XX | XX | | M | 3,980 | L2 | 1,980 | M | | XX | XX | 20 |
| 21 | 60A-2P | AHU-5 | | M | 3,120 | L1 | | G | | | | 22 |
| 23 | XX | XX | | M | 3,120 | L2 | | G | | | | 24 |

| | | | |
|---|---|---|---|
| PANEL | PANEL 1 - P1 | FEEDER | |
| FED FROM | METER PANEL D1 | NUMBER OF CONDUITS | 1 |
| # CIRCUITS | 42 | FEEDER CONDUIT | 1 1/4" |
| H VOLTAGE | 240 | WIRE SIZE L1 | #1 |
| LOW VOLTAGE | 120 | WIRE SIZE L2 | #1 |
| PHASE | 1 | | |
| DESIGN LOAD AMPS | 116 | WIRE SIZE NEUTRAL | #1 |
| NEUTRAL BUS | YES | WIRE SIZE GROUND | #6 |
| GROUND BUS | YES | | |
| AVAILABLE FAULT CURRENT AT THIS PANEL | 3,872 | | |
| MAIN LUG ONLY | | | |

| # | BKR | CIRCUIT DESCRIPTION | H | I | VA | | VA | I | H | CIRCUIT DESCRIPTION | BKR | # |
|---|---|---|---|---|---|---|---|---|---|---|---|---|
| 1 | 50A-2P | AHU-6 | | M | 3,120 | L1 | 1,980 | M | | COND UNIT-6 | 40A-2P | 2 |
| 3 | XX | XX | | M | 3,120 | L2 | 1,980 | M | | XX | XX | 4 |
| 5 | 20A-1P | GEN PURP RECEPT | | G | 360 | L1 | 360 | G | | GEN PURP RECEPT | 20A-1P | 6 |
| 7 | 20A-1P | GEN PURP RECEPT | | G | 360 | L2 | 360 | G | | GEN PURP RECEPT | 20A-1P | 8 |
| 9 | 40A-2P | WATER HEATER | | C | 1,800 | L1 | 360 | G | | GEN PURP RECEPT | 20A-1P | 10 |
| 11 | XX | XX | | C | 1,800 | L2 | 360 | G | | GEN PURP RECEPT | 20A-1P | 12 |
| 13 | 20A-1P | GEN PURP RECEPT | | G | 360 | L1 | 360 | G | | GEN PURP RECEPT | 20A-1P | 14 |
| 15 | 20A-1P | GEN PURP RECEPT | | G | 360 | L2 | 360 | C | C | GEN PURP RECEPT | 20A-1P | 16 |
| 17 | 20A-1P | GEN PURP RECEPT | | G | 360 | L1 | 360 | C | | GEN PURP RECEPT | 20A-1P | 18 |
| 19 | 20A-1P | LIGHTING | | C | 380 | L2 | 380 | C | | LIGHTING | 20A-1P | 20 |
| 21 | 20A-1P | LIGHTING | | C | 380 | L1 | 380 | C | | LIGHTING | 20A-1P | 22 |
| 23 | 20A-1P | LIGHTING | | C | 380 | L2 | 380 | C | | LIGHTING | 20A-1P | 24 |
| 25 | 20A-1P | LIGHTING | | C | 380 | L1 | 380 | C | | LIGHTING | 20A-1P | 26 |
| 27 | 20A-1P | LIGHTING | | C | 380 | L2 | 380 | C | | LIGHTING | 20A-1P | 28 |
| 29 | 20A-1P | LIGHTING | | C | 380 | L1 | 380 | C | | LIGHTING | 20A-1P | 30 |
| 31 | 20A-1P | LIGHTING | | C | 380 | L2 | 380 | C | | LIGHTING | 20A-1P | 32 |
| 33 | 20A-1P | EMERGENCY LIGHTING | | C | 300 | L1 | | G | | | | 34 |
| 35 | | | | G | | L2 | | G | | | | 36 |
| 37 | | | | G | | L1 | | G | | | | 38 |
| 39 | | | | G | | L2 | | G | | | | 40 |
| 41 | | | | G | | L1 | | G | | | | 42 |

3 E101 PANEL SCHEDULE

SCALE: NTS

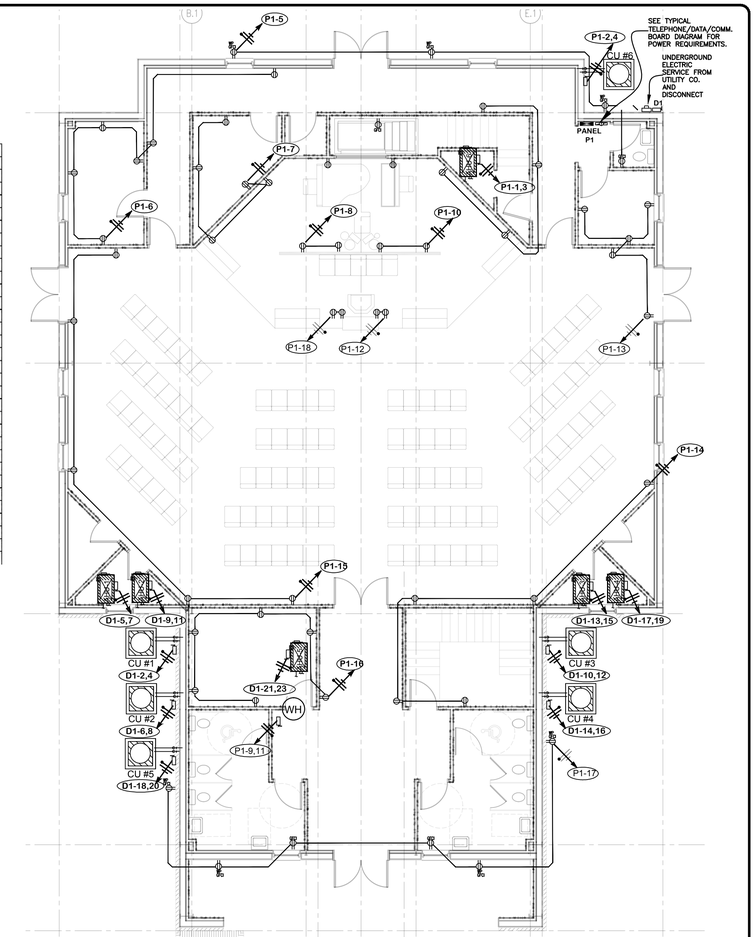


2 E101 POWER PLAN

SCALE: 3/16=1'

## ELECTRICAL LEGEND

| SYMBOL | DESCRIPTION ◯ FLOOR ⬡ CEILING ☐ WALL |
|---|---|
| | EXIT SIGN (ARROW INDICATES EGRESS PATH) |
| | CEILING FAN; WALL MOUNTED FAN |
| $ $3 $D $2 | LIGHT SWITCH; 3–WAY SWITCH; DIMMER SWITCH; 2–POLE SWITCH |
| GFCI 30A | DUPLEX OUTLET; GFCI OUTLET; 230V–30AMP OUTLET |
| | SPECIAL OUTLET; DOUBLE DUPLEX OUTLET |
| S T | SMOKE DETECTOR; THERMOSTAT |
| 30A | FLOOR DUPLEX OUTLET; 240V–30AMP OUTLET; |
| J C | JUNCTION BOX; LIGHTING CONTACTOR; |
| | TELEPHONE OUTLET; DATA OUTLET; TELEPHONE/DATA OUTLET |
| TV | FLUSH MOUNT WALL BOX WITH COAX – 18" A.F.F |
| S | SURVEILLANCE CAMERA |
| | LED 2x4 TROFFER |
| B | 2x4 LED TROFFER WTH BATTERY EMERGENCY LIGHTING |
| | LINEAR LED SURFACE MOUNT LIGHT |
| | CEILING MOUNTED FIXTURE; WALL MOUNTED FIXTURE |
| P | FLOODLIGHT; PENDANT LIGHT |
| WP | RECESSED LIGHT FIXTURE; WATERPROOF LIGHT FIXTURE |
| VTL SQ | HEATER/VENT/LIGHT; VENT/LIGHT; VENT FAN |
| | ELECTRIC METER |
| | DISCONNECT: NEMA 1 (INDOOR); NEMA 3 (OUTDOOR) |
| T | POWER PANEL;TELE/DATA COMMUNICATION PANEL |
| | NEMA 3R PHOTOCELL; WALL PACK |
| | CEILING MOUNTED FIRE ALARM AUDIO/VISUAL DEVICE |
| WH WH | WATER HEATER; TANKLESS WATER HEATER |

*****NOTE:
ALL EXIT AND EMERGENCY LIGHTING TO BE AS PER NEC ARTICLE 700 AND CONNECTED TO CKT # P1–33

PRELIMINARY DOCUMENT

NOT INTENDED FOR CONSTRUCTION, BIDDING, SALES OR ISSUANCE OF A PERMIT

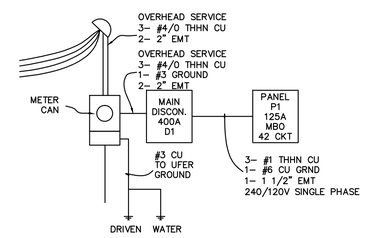


4 E101 POWER PLAN

SCALE: 3/16=1'

## LIGHTING FIXTURE SCHEDULE

| TYPE | MANUFACTURER | CATALOG NUMBER | LUMEN PACKAGE/LAMPS | REMARKS |
|---|---|---|---|---|
| 1 | TCP | DF–F–4–UZD–120V/277V–50–41K | 5000 LUM, 4100K | 2'x4' GRID LED TROFFER, A12 LENS, 0–10V NON DIMMING DRIVER |
| 2 | LITHONIA | REAL6C D6MW ESL 1000L 35K .95SC 120 LP6LN | 1000 LUM, 3500K | 6" RECESSED LED DOWNLIGHT |
| 3 | GENERIC | 80W LED WALL PACK–ROATABLE– 400W | 10,700 LUM, 4000K | EXTERIOR WALL PACK; 20' A.F.F. BRONZE FINISH |
| 4 | LITHONIA | LQM S W 3 R 120/277 | LED'S | EXIT SIGH, WALL OR CEILING MOUNTED |
| 5 | GENERIC | VAPOR TIGHT LED 4FT SURFACE | 4000 LUM, 4000K | SURFACE MOUNT WRAP 4' W/8280 LUMENS |
| 6 | BROAN | NUTONE 791LEDM | 1.5 SONES | BATHROOM VENT FAN WITH LED LIGHT |
| 7 | LUMEGEN | LG–HBUG2–240W–AW–40K–D– 277V | 240W/32,340 LUMENS | LED HIGH WAY WAREHOUSE LIGHTING |

NOBLES & ASSOCIATES L.L.C.
PROFESSIONAL ENGINEERS, LAND SURVEYORS, & DESIGNERS
562 COLUMBIA STREET, BOGALUSA, LA. 70427 P: 985-723-0380
800 MARINERS PLAZA, SUITE 808, MANDEVILLE, LA. 70448 P: 985-727-7221

NEW BUILDING FOR

# SUPERIOR AVENUE CHURCH

SANCTUARY

HIGHWAY 21, BOGALUSA, LA 70427

| Rev. No. | Date | Description |
|---|---|---|
| | | |

ENGINEER OF RECORD
NAME GEORGE NOBLES
NUMBER 11767

POWER & LIGHTING PLAN

Job No. E-00165

| Dwn. | Chk. |
|---|---|
| SWL | GBN |
| Date | Rev. |
| 01/25/2022 | REV. 0 |

E101

Sheet 1 Of *

THESE DRAWINGS ARE THE SOLE PROPERTY OF NOBLES & ASSOCIATES L.L.C., AND ARE ISSUED AS INSTRUMENTS OF SERVICE. THESE DRAWINGS SHALL NOT BE COPIED, REPRODUCED OR USED IN ANY MANNER WITHOUT WRITTEN CONSENT OF NOBLES & ASSOCIATES L.L.C.

REVISED: Z:\ENGINEERING\NEW JOBS\E-00165\Superior Avenue\BMarch\DWG\Multipurpose

COPYRIGHT 2021 NOBLES & ASSOCIATES, L.L.C.

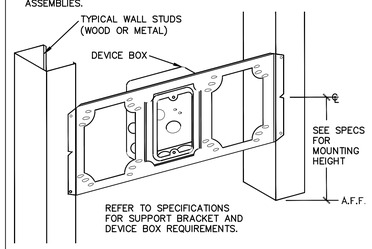


*NOTE: DEVICES FOR ADJACENT ROOMS SHALL NOT BE INSTALLED IN THE SAME STUD SPACE.

1 BOX MOUNTING BRACKET DETAIL
SCALE: NTS

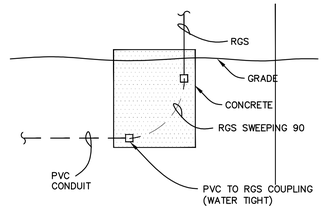


NOTE:
SUBMIT DIGITAL PHOTOS OF INSTALLATION, BEFORE & AFTER CONCRETE POUR.

2 TYPICAL UNDERGROUND STUB-UP DETAIL
SCALE: NTS

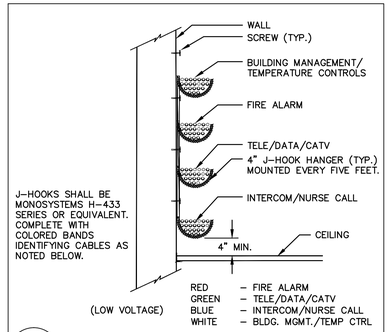


3 J-HOOK DETAIL FOR COMM. CABLES
SCALE: NTS

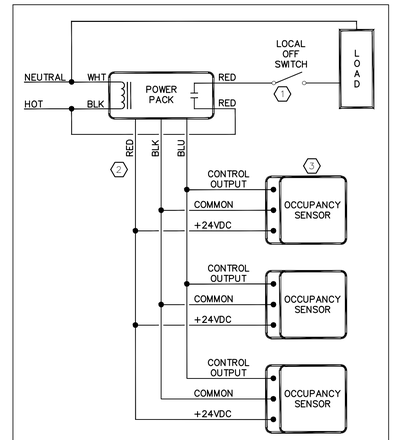


KEYNOTES:
1. PROVIDE AND INSTALL LIGHTING TOGGLE SWITCH ON STRIKE SIDE OF DOOR.
2. COLOR DESIGNATIONS OF CONDUCTORS WILL VARY BY MANUFACTURER. CONTRACTOR SHALL OBTAIN LATEST WIRING DIAGRAMS FROM MANUFACTURES USED. THIS WIRING DIAGRAM IS FOR DIAGRAMMATIC PURPOSES ONLY.
3. REFER TO SPECIFICATIONS FOR OCCUPANCY SENSOR REQUIREMENTS.

NOTE: TYPICAL FOR ROOMS WITH MULTIPLE CEILING MOUNTED OCCUPANCY SENSORS CONTROLLING LIGHTING LOAD.

7 MULTIPLE OCCUPANCY SENSOR WIRING DIAGRAM
SCALE: NTS

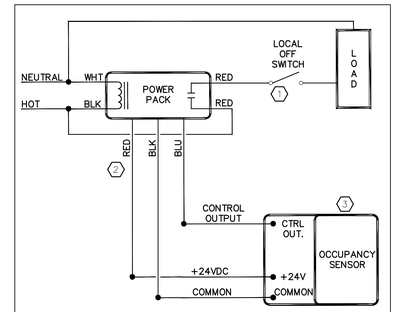


KEYNOTES:
1. PROVIDE AND INSTALL LIGHTING TOGGLE SWITCH ON STRIKE SIDE OF DOOR.
2. COLOR DESIGNATIONS OF CONDUCTORS WILL VARY BY MANUFACTURER. CONTRACTOR SHALL OBTAIN LATEST WIRING DIAGRAMS FROM MANUFACTURES USED. THIS WIRING DIAGRAM IS FOR DIAGRAMMATIC PURPOSES ONLY.
3. REFER TO SPECIFICATIONS FOR OCCUPANCY SENSOR REQUIREMENTS.

NOTE: TYPICAL FOR ROOMS WITH SINGLE CEILING MOUNTED OCCUPANCY SENSORS CONTROLLING LIGHTING LOAD.

8 SINGLE OCCUPANCY SENSORS WIRING DIAGRAM
SCALE: NTS

PRELIMINARY DOCUMENT
NOT INTENDED FOR CONSTRUCTION, BIDDING, SALES OR ISSUANCE OF A PERMIT

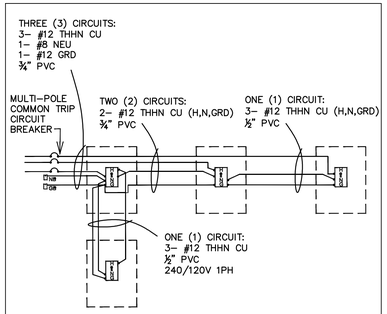


4 MULTILE CIRCUIT NEUTRAL WIRING DIAGRAM
SCALE: NTS

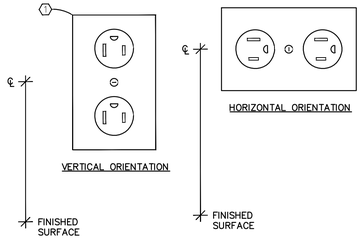


KEYNOTES:
1. REFER TO SPECIFICATIONS FOR RECEPTACLE REQUIREMENTS.
2. MOUNTING HEIGHT IS MEASURED FROM FINISHED FLOOR.

5 TYPICAL RECEPT.INSTALLATION REQUIREMENTS
SCALE: NTS

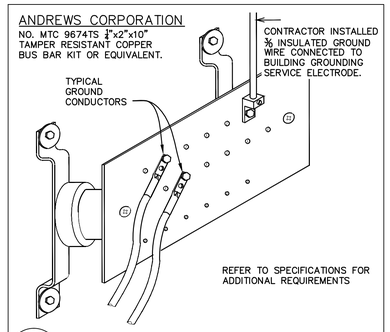


6 TELE/CATV/DATA GROUND DETAIL
SCALE: NTS

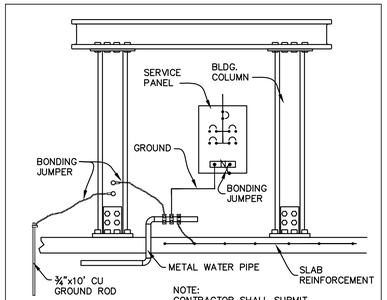


NOTE:
CONTRACTOR SHALL SUBMIT DIGITAL PHOTOS OF ALL GROUNDING TERMINATIONS.

9 GROUND TO BLDG. STEEL DETAIL
SCALE: NTS

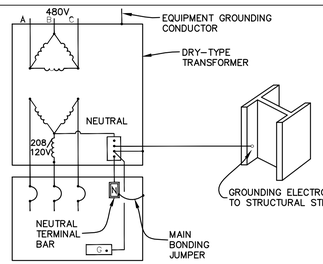


NOTE:
SUBMIT DIGITAL PHOTOS OF ALL GROUNDING TERMINATIONS.

* REFER TO SPECIFICATIONS FOR ADDITIONAL REQUIREMENTS.

10 TRANS. GROUNDING DETAIL
SCALE: NTS

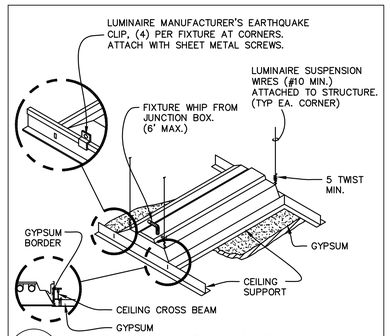


11 LUMINAIRE MOUNTING GYPBOARD CEILING
SCALE: NTS

TYPICAL PANELBOARD PLAQUE

(INDICATE PANEL DESIGNATION)
__ /__ VOLTS __ PHASE __ WIRE
__ AMPS MAIN __
FED FROM
(INDICATE FEEDER DESIGNATION ID.)
(PANEL & CIRCUIT NUMBER)

SEE SPECIFICATIONS FOR MATERIALS, COLORS, SIZE, LETTERING, ETC.

TYPICAL DISCONNECT PLAQUE

(INDICATE EQUIPMENT DESIGNATION)
FUSED AT __ AMPERES
FED FROM
(INDICATE FEEDER ORIGINATION ID.)
(PANEL & CIRCUIT NUMBER)

ATTACH PLAQUES USING INDUSTRIAL GRADE DOUBLE FACE ADHESIVE.

12 ELECTRICAL EQUIPMENT SIGNAGE DETAIL
SCALE: NTS

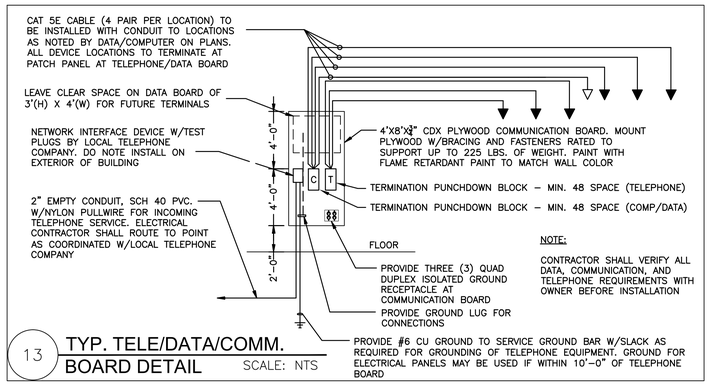


NOTE:
CONTRACTOR SHALL VERIFY ALL DATA, COMMUNICATION, AND TELEPHONE REQUIREMENTS WITH OWNER BEFORE INSTALLATION

13 TYP. TELE/DATA/COMM. BOARD DETAIL
SCALE: NTS

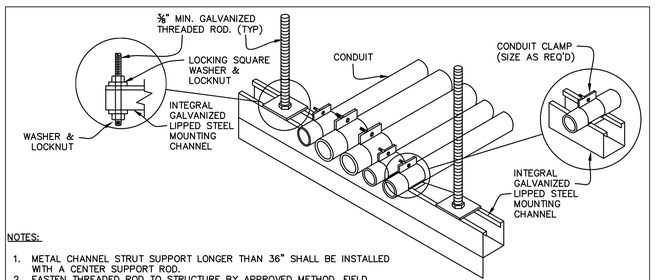


NOTES:
1. METAL CHANNEL STRUT SUPPORT LONGER THAN 36" SHALL BE INSTALLED WITH A CENTER SUPPORT ROD.
2. FASTEN THREADED ROD TO STRUCTURE BY APPROVED METHOD. FIELD VERIFY EXACT CONDITIONS.

14 CONDUIT TRAPEZE MOUNTING DETAIL
SCALE: NTS

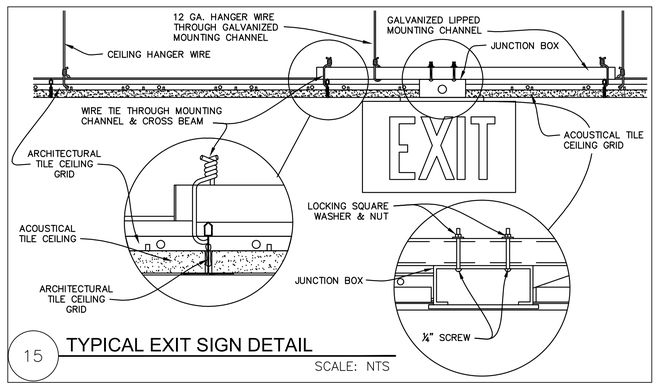


15 TYPICAL EXIT SIGN DETAIL
SCALE: NTS

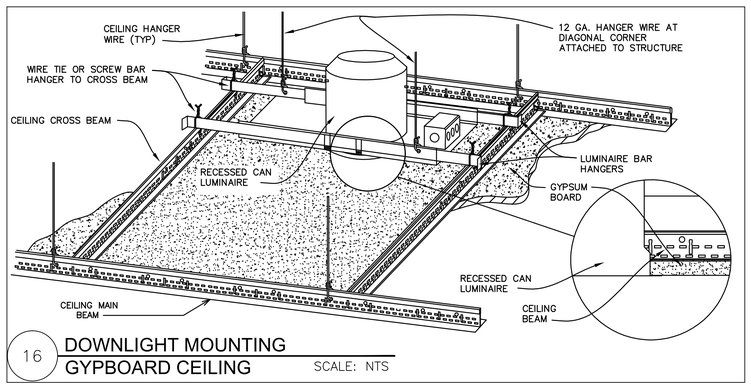


16 DOWNLIGHT MOUNTING GYPBOARD CEILING
SCALE: NTS

NOBLES & ASSOCIATES L.L.C.
PROFESSIONAL ENGINEERS, LAND SURVEYORS, & DESIGNERS
562 COLUMBIA STREET, BOGALUSA, LA. 70427 P: 985-723-0380
800 MARINERS PLAZA, SUITE 800, MANDEVILLE, LA. 70448 P: 985-727-7221

NEW BUILDING FOR
SUPERIOR AVENUE CHURCH
SANCTUARY
HIGHWAY 21, BOGALUSA, LA 70427

| Rev. No. | Date | Description |
|---|---|---|
| | | |

ENGINEER OF RECORD
NAME GEORGE NOBLES
NUMBER 31767

ELECTRICAL DETALS

Job No. E-00165
Dwn. SWL Chk. GBN
Date 01/25/2022 Rev. REV. 0

E103
Sheet 1 Of *

THESE DRAWINGS ARE THE SOLE PROPERTY OF NOBLES & ASSOCIATES L.L.C., AND ARE ISSUED AS INSTRUMENTS OF SERVICE. THESE DRAWINGS SHALL NOT BE COPIED, REPRODUCED OR USED IN ANY MANNER WITHOUT WRITTEN CONSENT OF NOBLES & ASSOCIATES L.L.C.

REVISED: Z:\ENGINEERING\NEW JOBS\E-00165 Superior Avenue Church\DWG\ AB/BP purpose

# ELECTRICAL SPECIFICATIONS

COPYRIGHT 2021, NOBLES & ASSOCIATES, L.L.C.

## ELECTRICAL SPECIFICATIONS

### SCOPE

A. INCLUDES THE FURNISHING OF ALL LABOR, SUPERVISION, MATERIALS, EQUIPMENT, TOOLS, ETC., REQUIRED FOR THE ELECTRICAL SYSTEMS AS SHOWN AND DESCRIBED IN THESE DRAWINGS.

B. THE WORK SHALL INCLUDE; BUT IS NOT NECESSARILY LIMITED TO, THE FOLLOWING:

1. ELECTRICAL DEMOLITION
2. NEW 230/120V, SINGLE PHASE, THREE WIRE ELECTRICAL SERVICE
3. NEW TELECOMMUNICATIONS SERVICE
4. SWITCHGEAR AND PANELBOARDS
5. RACEWAYS
6. BUILDING WIRE AND CABLE
7. WIRING DEVICES
8. ELECTRICAL BOXES AND FITTINGS
9. CIRCUIT AND MOTOR DISCONNECTS
10. SUPPORTING DEVICES
11. SEISMIC RESTRAINTS
12. ELECTRICAL IDENTIFICATION
13. GROUNDING
14. LIGHTING
15. CONDUIT FOR TELECOMMUNICATION SYSTEMS

### WORK BY OTHERS

A. THE FOLLOWING WORK RELATED TO WORK UNDER THIS DIVISION OF THE SPECIFICATIONS WILL BE PROVIDED BY OTHERS.

1. HEATING VENTILATING, AIR CONDITIONING AND PLUMBING EQUIPMENT, INCLUDING MOTORS, MOTOR STARTERS AND CONTROL EQUIPMENT WILL BE FURNISHED AND INSTALLED UNDER DIVISION 15.
2. PAINTING, EXCEPT REPAIR OF FACTORY APPLIED FINISHES ON ELECTRICAL EQUIPMENT.
3. TELECOM SYSTEMS PREMISES WIRING AND ASSOCIATED SERVICE EQUIPMENT EXCLUDING EQUIPMENT REQUIRED BY LOCAL SERVICE PROVIDER(S) FOR SERVICE ENTRANCE INTO FACILITY.

### CODES AND PERMITS

A. ALL WORK UNDER DIVISION 16 SHALL BE INSTALLED IN ACCORDANCE WITH THE REQUIREMENTS OF THE 2017 EDITION OF THE NATIONAL ELECTRICAL CODE, AND THE LATEST EDITION OF ALL LOCAL OR STATE CODES, LAWS, AND ORDINANCES, AND THE REQUIREMENTS OF THE LOCAL ELECTRIC UTILITY.

B. THIS CONTRACTOR SHALL APPLY FOR, OBTAIN, AND PAY FOR ALL PERMITS REQUIRED, AT THE CONCLUSION OF THE INSTALLATION, HE OR SHE SHALL SECURE A CERTIFICATE OF INSPECTION, PROPERLY SIGNED BY THE CONTROLLING BUILDING DEPARTMENT, WHICH SHALL STATE THAT ALL RULES HAVE BEEN COMPLIED WITH AND THAT THE WORK IS SATISFACTORY.

C. SHOULD ANY PART OF THE PLANS OF SPECIFICATIONS BE FOUND TO BE IN CONFLICT WITH APPLICABLE CODES OR ORDINANCES, THE CONTRACTOR SHALL NOTIFY THE ENGINEER BEFORE SUBMITTING HIS OR HER BID.

### TRADE NAMES AND EQUALS

A. MANUFACTURER'S TRADE NAMES OR CATALOG NUMBERS USED IN THESE SPECIFICATIONS AND INDICATED ON THE DRAWINGS DENOTE TYPE, SIZE, QUALITY, AND DESIGN OF EQUIPMENT REQUIRED.

B. WHERE EQUIPMENT IS SPECIFIED AS "EQUAL", OR "APPROVED EQUAL", IT SHALL MEAN EQUAL IN THE OPINION OF THE ENGINEER. THIS CONTRACTOR IS FREE TO OFFER SUBSTITUTIONS FOR CONSIDERATION AS EQUAL AFTER THE CONTRACTOR IS SIGNED; HOWEVER, HE SHALL BE PREPARED TO FURNISH SPECIFIED MATERIALS WHERE SUBSTITUTIONS ARE NOT APPROVED.

### MATERIAL AND EQUIPMENT

A. ALL MATERIALS AND EQUIPMENT SHALL BE NEW AND OF THE QUALITY SPECIFIED.

B. MATERIAL OR EQUIPMENT THAT HAS BEEN STORED OUTDOORS UNPROTECTED FOR LONG PERIODS OF TIME OR OTHERWISE DAMAGED IS NOT ACCEPTABLE AS NEW MATERIAL.

C. APPARATUS AND MATERIALS USED IN THIS WORK WHICH ARE SUBJECT TO APPROVAL OF UNDERWRITERS LABORATORIES (UL) SHALL BEAR THE UL LABEL, OR BE UNDERWRITERS LISTED.

### DELIVERY, STORAGE, AND HANDLING OF MATERIAL AND EQUIPMENT

A. THE CONTRACTOR SHALL BE RESPONSIBLE FOR THE PURCHASE, DELIVERY, AND STORAGE OF ALL MATERIALS AND EQUIPMENT INDICATED TO BE SUPPLIED UNDER THIS SECTION OF THE SPECIFICATIONS AND IT SHALL BE HIS OR HER RESPONSIBILITY TO SCHEDULE THE DELIVERY OF MATERIALS AND EQUIPMENT AT SUCH STAGES OF THE WORK AS WILL PERMIT UNINTERRUPTED CONSTRUCTION OF ALL PHASES OF THE WORK.

B. WHERE OWNER FURNISHED EQUIPMENT IS TO BE TURNED OVER TO THIS CONTRACTOR FOR INSTALLATION, IT SHALL BE THE RESPONSIBILITY OF THIS CONTRACTOR TO RECEIVE SUCH EQUIPMENT AND STORE IN A SAFE, DRY LOCATION.

C. THIS CONTRACTOR SHALL DO ALL REQUIRED RIGGING, HOISTING, TRANSPORTING, ETC., OF ALL EQUIPMENT FURNISHED UNDER THIS CONTRACT, AND SHALL FURTHER FURNISH ANY ADDITIONAL STRUCTURAL MEMBERS, AS MAY BE REQUIRED, FOR THE PROPER SUPPORT OF ANY AND ALL EQUIPMENT FURNISHED HEREUNDER.

### ACCURACY OF DATA

A. THE DRAWINGS ARE GENERALLY DIAGRAMMATIC, AND EXCEPT WHERE DIMENSIONS ARE SHOWN, ARE NOT INTENDED TO SHOW THE EXACT LOCATIONS OF OUTLETS, CONDUITS, SWITCHES, FIXTURES, ETC. ALL WORK SHALL BE INSTALLED AS NEARLY AS POSSIBLE IN THE LOCATIONS INDICATED, WITH ONLY SUCH MINOR ADJUSTMENTS AS WILL BE REQUIRED TO AVOID INTERFERENCES WITH STRUCTURE OR THE WORK OF OTHER TRADES.

B. SHOULD ANY STRUCTURAL OR MECHANICAL INTERFERENCES PREVENT THE INSTALLATION OF CONDUIT, SETTING OF JUNCTION BOXES AND CABINETS, ARRANGEMENT OF LIGHTING FIXTURES AND METHOD OF SUSPENSION, ETC., IN THE LOCATIONS INDICATED ON THE DRAWINGS, THE NECESSARY DEVIATIONS THEREFROM MUST BE MADE WITHOUT ADDITIONAL COST TO THE OWNER, WHERE RELOCATION IS NOT OVER FIVE (5) FEET FROM THE LOCATION SHOWN ON THE DRAWINGS.

C. THE DRAWINGS ARE FURTHER NOT INTENDED TO SHOW ALL JUNCTION OR PULL BOXES, FITTINGS AND CONNECTIONS, AND DETAILS OF WORK TO BE DONE, THIS CONTRACTOR SHALL SUPPLY ALL NECESSARY BOXES, FITTINGS, AND CONNECTIONS FOR COMPLETE INSTALLATION IN A SATISFACTORY MANNER.

D. ANY OFFSETS IN CONDUIT REQUIRED OR NECESSARY TO AVOID INTERFERENCES WITH STRUCTURE, OR THE WORK OF OTHER TRADES, ETC., SHALL BE MADE AT NO ADDITIONAL COST TO THE OWNER.

E. REFER TO ARCHITECTURAL AND STRUCTURAL DRAWINGS FOR ALL DIMENSIONS OF BUILDING SPACES.

F. THIS CONTRACTOR SHALL PREPARE SHOP DRAWINGS, AS NECESSARY, FOR HIS OR HER USE IN COORDINATING THE WORK TO AVOID INTERFERENCE.

### COORDINATION

A. THE ELECTRICAL CONTRACTOR SHALL COORDINATE HIS OR HER WORK WITH THAT OF OTHER SUBCONTRACTORS ON THE JOB AND ALSO WITH THAT OF THE OWNER IN ORDER THAT THERE BE NO DELAY IN THE PROPER INSTALLATION AND COMPLETION OF THE SEVERAL PARTS OF THE WORK.

B. THIS CONTRACTOR SHALL USE EVERY PRECAUTION TO PROTECT THE WORK OF OTHERS, AND HE WILL BE HELD RESPONSIBLE FOR ALL DAMAGE DONE BY HIS OR HER WORKERS TO THE WORK OF OTHER TRADES. HE OR SHE SHALL ALSO PROTECT HIS OR HER WORK FROM DANGER OF BREAKAGE, DIRT, FOREIGN MATERIALS, ETC., AND SHALL REPLACE ALL WORK SO DAMAGED.

C. COORDINATE PHASES OF THE WORK WITH THE OWNER AND OTHER TRADES TO ALLOW THE OWNER TO CONTINUE NORMAL BUSINESS OPERATIONS THROUGHOUT THE DURATION OF THE PROJECT AND NECESSARY POWER OUTAGES SHALL BE SCHEDULED FOR OTHER THAN THE OWNER'S HOURS OF OPERATION, OR BE PRE-ARRANGED WITH THE OWNER.

### MANUFACTURER'S RECOMMENDATIONS

A. UNLESS SPECIFICALLY INDICATED OTHERWISE, ALL EQUIPMENT AND MATERIALS SHALL BE INSTALLED IN ACCORDANCE WITH THE BEST RECOMMENDATION OF THE MANUFACTURER. A COPY OF THE MANUFACTURER'S INSTALLATION RECOMMENDATIONS SHALL BE KEPT IN THE JOB SUPERINTENDENT'S OFFICE AND SHALL BE AVAILABLE TO THE OWNER'S REPRESENTATIVE AT ALL TIMES.

*REVISED: Z: ENGINEERING\NEW JOBS\E-00165\Superior Avenue Church\DWG\E104purpose*

### CUTTING AND PATCHING

A. THIS CONTRACTOR SHALL BE RESPONSIBLE FOR ALL CUTTING AND PATCHING REQUIRED FOR THE INSTALLATION OF HIS WORK, AND HE SHALL EMPLOY WORKERS SKILLED IN THE TRADES REQUIRED FOR ALL CUTTING AND PATCHING WORK.

B. THIS CONTRACTOR SHALL BE RESPONSIBLE FOR THE PROPER LOCATION OF ALL CHASES, RECESSES, AND OPENINGS REQUIRED FOR HIS WORK.

C. THIS CONTRACTOR SHALL PROVIDE ALL SLEEVES, ETC., REQUIRED FOR THE INTRODUCTION AND PLACEMENT OF HIS WORK, AND SHALL BE RESPONSIBLE FOR THE CORRECT LOCATION.

D. BEAMS OR COLUMNS SHALL NOT BE PIERCED WITHOUT PERMISSION OF THE STRUCTURAL ENGINEER, AND THEN ONLY AS DIRECTED.

### PROTECTION OF FLOORS

A. THIS CONTRACTOR'S ATTENTION IS DIRECTED TO THE NEED TO PROTECT FINISHED FLOORS, AND HE OR SHE WILL BE HELD RESPONSIBLE FOR DAMAGE HE OR SHE MAY DO TO FINISHED FLOORS, WHERE HEAVY EQUIPMENT IS TO BE MOVED ACROSS FINISHED FLOORS. THIS CONTRACTOR SHALL MAKE PROVISIONS TO PROTECT THE FLOOR.

B. WHERE PIPE CUTTINGS AND THREADING OPERATIONS ARE CARRIED ON BY THIS CONTRACTOR, HE OR SHE SHALL PROVIDE A SUITABLE COVERING MATERIAL OVER THE FLOOR WHICH WILL ASSURE THAT OIL AND PIPE CUTTINGS DO NOT COME IN CONTACT WITH THE FINISHED FLOOR. TEMPORARY FLOOR COVERING SHALL BE PLYWOOD OR OTHER MATERIALS AS MAY BE APPROVED BY THE ENGINEER.

C. THIS CONTRACTOR SHALL REMOVE ALL TEMPORARY FLOOR COVERING, AS HE OR SHE COMPLETES HIS OR HER WORK IN EACH AREA. ANY DAMAGE RESULTING FROM ACTIVITIES OF THIS CONTRACTOR SHALL BE REPAIRED AT HIS OR HER OWN EXPENSE.

### PAINTING

A. THE ELECTRICAL CONTRACTOR SHALL REFINISH AND RESTORE TO THE ORIGINAL CONDITION AND APPEARANCE, ALL ELECTRICAL EQUIPMENT WHICH HAS SUSTAINED DAMAGE TO MANUFACTURER'S FINISH PAINT. FINISHES SHALL INCLUDE GALVANIZING THAT HAS BEEN REMOVED DURING INSTALLATION.

B. ALL ELECTRICAL EQUIPMENT SHALL BE PROVIDED WITH FACTORY APPLIED PRIME AND FINISH PAINT, UNLESS OTHERWISE SPECIFIED.

### SHOP DRAWINGS (SUBMITTALS)

A. SIX COPIES OF SHOP DRAWINGS AND/OR MANUFACTURER'S DESCRIPTIVE DATA OF A NATURE TO COMPLETELY IDENTIFY THE EQUALITY OF THE MATERIAL OR EQUIPMENT INTENDED FOR INSTALLATION SHALL BE SUBMITTED FOR APPROVAL BEFORE BEGINNING AND CONSTRUCTION AND WITHIN THIRTY DAYS AFTER SIGNING CONTRACT. FAILURE TO SUBMIT DATA FOR APPROVAL WITHIN THIRTY DAYS TIME LIMIT WILL BE CONSTRUED AS MEANING EQUIPMENT LISTED BELOW, SHALL BE SUBMITTED ALL IN ONE THREE RING BINDER, INDEXED BY FLYSHEET ON FRONT PAGE, EACH ITEM TABBED AND LABELED, ARRANGED IN THE ORDER THEY APPEAR IN THE SPECIFICATIONS, AND BE BOUND IN SETS. ALL SETS IDENTICAL. NO EXCEPTION WILL BE MADE TO THIS PROCEDURE AND TIME SCHEDULE.

B. EACH ITEM SUBMITTED FOR REVIEW SHALL HAVE SUBMITTAL DATA PRECEDED BY A TYPEWRITTEN DESCRIPTION (BY CONTRACTOR OR ITEM SUPPLIER) OF THE ITEM. DESCRIPTION TO INCLUDE MAKE, AND MODEL NUMBERS AND SHALL DESCRIBE THE ITEM. LIST ALL OPTIONS AND ACCESSORIES SHOWN ON SHOP DRAWINGS WHICH ARE NOT INCLUDED.

SUBMIT THE FOLLOWING FOR APPROVAL:

1. RACEWAYS
2. WIRES AND CABLES
3. ELECTRICAL BOXES
4. WIRE CONNECTION AND CONNECTING DEVICES
5. WIRING DEVICES
6. CIRCUIT/MOTOR DISCONNECTS
7. PANELBOARDS
8. OVERCURRENT PROTECTIVE DEVICES
9. CONTRACTORS AND LIGHTING CONTROL EQUIPMENT
10. LAMPS, BALLASTS, AND LIGHTING FIXTURES

C. CONTRACTOR SHALL SUBMIT 1/4" SCALED PLANS OF EACH ELECTRICAL ROOM DEPICTING THE LOCATION AND ARRANGEMENT OF ALL ELECTRICAL EQUIPMENT.

### RECORD DRAWINGS

A. THIS CONTRACTOR SHALL MAINTAIN A COMPLETE UP-TO-DATE SET OF RECORD DRAWINGS AND SPECIFICATIONS ON THE JOB SITE. DRAWINGS SHALL BE MAINTAINED IN A NEAT CONDITION AND SHALL CLEARLY SHOW ANY CHANGES FROM ORIGINAL DRAWINGS AND SPECIFICATIONS.

B. CONTRACTOR SHALL USE A DESIGNATED SET OF PRINTS OF THE CONTRACT DOCUMENTS, AS PREPARED BY THE ENGINEER, TO MARK UP FOR RECORD DRAWING PURPOSES.

C. THE CONTRACTOR SHALL PREPARE A SET OF REPRODUCIBLE RECORD DRAWINGS. THESE DRAWINGS AND A SET OF SPECIFICATIONS SHALL BE TURNED OVER TO THE OWNER AND SHALL BECOME THE PROPERTY OF THE OWNER BEFORE FINAL PAYMENT WILL BE MADE.

### MAINTENANCE MANUALS

A. CONTRACTOR SHALL PROVIDE THREE (3) COPIES OF OPERATIONAL AND MAINTENANCE MANUALS FOR ALL EQUIPMENT INSTALLED UNDER THIS DIVISION OF THE SPECIFICATIONS. THE MANUALS SHALL INCLUDE A LIST OF SPARE PARTS AND PROPER OPERATIONAL AND MAINTENANCE PROCEDURES.

B. THE MANUALS SHALL BE ORGANIZED AND FULLY INDEXED. MANUALS SHALL CONSIST OF THREE-RING, HARD BACK BINDERS WITH APPROPRIATE DIVIDERS FOR EACH PART.

C. MANUAL CONTENTS SHALL INCLUDE, BUT SHALL NOT BE LIMITED TO THE FOLLOWING:

1. NAME AND ADDRESS OF CONTRACTOR, EQUIPMENT MANUFACTURER AND SUPPLIER
2. SET OF APPROVED SHOP DRAWINGS OR APPROVED SUBMITTAL DATA
3. WIRING DIAGRAMS AND INSTALLATION DRAWINGS
4. SPARE PARTS AND REPLACEMENT PARTS LISTS AS RECOMMENDED BY THE MANUFACTURER
5. PROPER OPERATIONAL PROCEDURES AND MAINTENANCE PROCEDURES
6. INSTALLATION AND OPERATIONAL MANUALS
7. MAINTENANCE AND SERVICE MANUALS
8. COPY OF WARRANTIES AND GUARANTEES

9. OPERATING AND MAINTENANCE MANUALS SHALL BE TURNED OVER TO THE OWNER BEFORE FINAL PAYMENT WILL BE MADE.

10. IT SHALL BE THE RESPONSIBILITY OF THIS CONTRACTOR TO MAINTAIN, WARRANT, CLEAN, ETC., ANY EQUIPMENT SUPPLIED BY THIS CONTRACTOR UNTIL ALL INSTALLATION AND OPERATING AND MAINTENANCE MANUALS ARE TURNED OVER TO THE OWNER.

### TEMPORARY CONSTRUCTION POWER AND LIGHTING

A. THIS CONTRACTOR SHALL FURNISH AND INSTALL ALL TEMPORARY WIRING FOR CONSTRUCTION POWER AND LIGHTING FOR THE PROJECT AS REQUIRED.

B. A TEMPORARY ELECTRICAL SERVICE, IF REQUIRED, FOR CONSTRUCTION POWER AND LIGHTING SHALL BE OBTAINED BY THIS CONTRACTOR IN THE NAME OF THE OWNER, WHO WILL PAY ALL POWER AND ENERGY CHARGES. ANY COST FOR THE TEMPORARY SERVICE CONNECTION SHALL BE PAID BY THIS CONTRACTOR.

### TEST

A. THE ENTIRE BUILDING WIRING SYSTEM SHALL BE THOROUGHLY TESTED AND CORRECTED OF ALL DEFECTS. ALL ELECTRICAL WIRING SHALL BE TESTED FOR CONTINUITY, SHORTS, IMPROPER GROUNDS AND INSULATION RESISTANCE. MOTORS SHALL BE CHECKED FOR PROPER ROTATION AND BRANCH CIRCUIT AND OVERLOAD PROTECTION. PANELBOARDS SHALL BE CHECKED FOR BALANCED LADING AND CORRECT PHASE ROTATION. ALL DISCREPANCIES SHALL BE CORRECTED. THIS CONTRACTOR SHALL FURNISH TEST EQUIPMENT AND MATERIAL, AND SHALL BE RESPONSIBLE FOR REPLACEMENT OR REPAIR OF DAMAGE DUE TO TEST FAILURES.

B. AFTER INSTALLATION IS COMPLETE, VOLTAGE MEASUREMENTS SHALL BE MADE AT EACH PANELBOARD TO VERIFY PROPER SYSTEM VOLTAGES. VOLTAGE SHALL BE MEASURED UNDER LOAD CONDITIONS WHERE POSSIBLE. VOLTAGE READINGS SHALL BE RECORDED.

C. AFTER ALL TESTS HAVE BEEN COMPLETED, THIS CONTRACTOR SHALL CLEAN ALL THE FIXTURES AND REPLACE ANY LAMPS USED FOR TEMPORARY LIGHTING. ALL EQUIPMENT AND CONDUIT SHALL BE CLEANED AND LEFT IN WORKING ORDER. ALL DEBRIS CREATED BY THE EXECUTION OF THE ELECTRICAL WORK SHALL BE REMOVED BY THIS CONTRACTOR. THIS CONTRACTOR SHALL TAKE ALL NECESSARY PRECAUTIONS TO KEEP PANELS, ESPECIALLY CIRCUIT BREAKER HANDLES, CLEAN DURING CONSTRUCTION.

D. CHECK ALL CONTROL AND INTERLOCKING WIRING FOR PROPER OPERATIONS. PERFORM OPERATIONAL TESTS TO ASSURE THAT CONTROL WIRING HAS BEEN PROPERLY INSTALLED.

E. PRIOR TO FINAL ACCEPTANCE, CONTRACTOR SHALL PROVIDE ALL TEST RESULTS TO ENSURE THAT SYSTEM IS FREE OF DEFECTS AND FULLY OPERATIONAL.

### GUARANTEE

A. THE CONTRACTOR SHALL GUARANTEE TO THE OWNER ALL WORK PERFORMED UNDER THIS CONTACT TO BE FREE FROM DEFECTS IN WORKMANSHIP AND MATERIAL FOR A PERIOD OF ONE (1) YEAR FROM DATE OF FINAL ACCEPTANCE. DEFECTS ARISING DURING THIS PERIOD WILL BE PROMPTLY REMEDIED BY THE CONTRACTOR AT HIS OR HER OWN EXPENSE UPON GUARANTEE, BUT ONE (1) COMPLETE AND OPERATIVE SET OF LAMPS FOR LIGHTING FIXTURES SHALL BE IN PLACE AT THE TIME OF FINAL ACCEPTANCE.

### SITE WORK

A. BEFORE STARTING EXCAVATION, ESTABLISH THE LOCATION OF UNDERGROUND AND OVERHEAD UTILITIES IN THE WORK AREA. EXERCISE CARE TO PROTECT EXISTING UTILITIES DURING EARTHWORK OPERATIONS. PERFORM EXCAVATION WORK NEAR UTILITIES BY HAND AND PROVIDE NECESSARY SHORING, SHEETING, AND SUPPORTS AS THE WORK PROGRESSES.

B. MAINTAIN, PROTECT, RELOCATE, OR EXTEND AS REQUIRED EXISTING UTILITY LINES TO REMAIN WHICH PASS THROUGHOUT THE WORK AREA.

C. IN COORDINATION WITH LOCAL ORDINANCES, REMOVE ABANDONED UTILITY SERVICE LINES FROM AREAS OF EXCAVATION, IF DISCOVERED CAP, PLUG, OR SEAL ABANDONED LINES AND IDENTIFY TERMINATION POINTS AT GRADE LEVEL WITH MARKERS.

D. BACKFILL TRENCHES ONLY AFTER CONDUITS HAVE BEEN INSPECTED AND THE LOCATIONS OF CONDUITS HAVE BEEN RECORDED ON AS-BUILT DRAWINGS.

E. AFTER CONDUIT HAS BEEN LAID AND JOINTED, THE CONDUIT SHALL BE BEDDED IN THE TRENCH AND MADE SECURE AGAINST MOVEMENT BY BACKFILLING THE TRENCH BY HAND WITH 3/4" WASHED GRAVEL OR SAND TO A DEPTH OF 12" ABOVE THE TOP OF THE CONDUIT. ALL SCHEDULE 40 PVC CONDUIT SHALL BE ENCASED IN A 3: CONCRETE ENVELOPE.

F. BACKFILL REMAINING DEPTH WITH EXCAVATED MATERIAL, EXCEPT THAT THE MATERIAL MAY CONTAIN STONES, ROCKS, CONCRETE, OR MASONRY MATERIALS (BUT NO CINDERS), WITH A MAXIMUM DIMENSION OF FOUR (4) INCHES PROVIDED THAT THE VOIDS IN SUCH COARSE MATERIALS ARE COMPLETELY FILLED WITH EARTH OR GRANULAR MATERIAL.

G. THOROUGHLY COMPACT BACKFILL BY TAMPING WITH A MANUAL TAMP OR AN APPROVED MECHANICAL TAMPING DEVICE.

H. WHERE PLACEMENT OF UNDERGROUND CONDUIT DISTURBS PAVED AREAS, THE PAVEMENT SHALL BE REPAIRED WITH MATERIALS OF THE SAME TYPE AND STRENGTH AS THAT REMOVED.

### RACEWAYS

A. ALL WIRING SHALL BE INSTALLED IN A CONTINUOUS RACEWAY SYSTEM, OR TYPE MC CABLE AS ALLOWED ELSEWHERE IN THESE SPECIFICATIONS. CONDUIT SHALL BE RUN CONCEALED OR EXPOSED, AS SPECIFICALLY INDICATED ON THE PLANS. IN GENERAL, CONDUIT IS INDICATED TO BE RUN CONCEALED IN FINISHED AREAS; ALL OTHER CONDUIT IS RUN EXPOSED.

B. ELECTRICAL METALLIC TUBING (EMT) MAY BE USED WHERE CONDUIT IS RUN CONCEALED IN WALLS ABOVE THE FLOOR SLAB AND ABOVE OFFICE SPACES. EXPOSED CONDUIT ABOVE 6" AFF SHALL BE EMT (UNLESS OTHERWISE NOTED).

C. GALVANIZED RIGID STEEL CONDUIT OR SCHEDULE 40 PVC CONDUIT SHALL BE USED UNDERGROUND AND WHERE CONDUIT IS RUN UNDER THE FLOOR SLAB. GALVANIZED RIGID STEEL ELBOWS SHALL BE USED IN ALL THE CONDUIT RUNS AND WHERE CONDUITS ARE STUBBED UP THROUGH FLOOR SLABS. GALVANIZED RIGID STEEL CONDUIT, OR INTERMEDIATE METAL CONDUIT SHALL BE USED WHERE CONDUIT PROJECTS ABOVE THE ROOF, WHERE CONDUIT IS SUBJECT TO PHYSICAL DAMAGE, AND ALL OTHER LOCATIONS SPECIFICALLY DESIGNATED ON THE DRAWINGS OR REQUIRED BY THE SPECIFICATIONS.

D. INTERMEDIATE STEEL CONDUIT MAY BE USED IN LIEU OF GALVANIZED RIGID STEEL CONDUIT, WHERE PERMITTED BY CODE.

E. LIQUID-TIGHT FLEXIBLE METAL CONDUIT IN SHORT LENGTHS (30" OR LESS) SHALL BE USED AT CONNECTIONS TO MOTORS, OR TO EQUIPMENT SUBJECT TO MOVEMENT, VIBRATION OR MISALIGNMENT. LIQUID-TIGHT FLEXIBLE CONDUIT SHALL NOT BE USED FOR OTHER APPLICATIONS.

F. CONTRACTOR MAY PROVIDE TYPE MC CABLE IN LIEU OF EMT CONDUIT OR FLEXIBLE METAL. CONDUIT CONCEALED IN WALLS OR CEILINGS FOR LIGHTING AND RECEPTACLE CIRCUITS, DO NOT USE TYPE MC CABLE FOR FIRE ALARM, HVAC EQUIPMENT, IN EXPOSED LOCATIONS, OUTDOORS, OR FOR CIRCUITS LARGER THAN 20 AMPS.

G. EXPOSED CONDUIT SHALL BE RUN IN PARALLEL ROWS NEATLY PACKED PARALLEL OR PERPENDICULAR TO WALLS AND STRUCTURAL MEMBERS.

H. INSTALL CONDUIT ONLY AFTER PROPOSED RUNS HAVE BEEN CHECKED ON PLANS AND AT SITE FOR INTERFERENCE WITH OTHER TRADES. WHEREVER POSSIBLE, LOCATE CONDUIT OVER PIPING OF OTHER TRADES. ALL HORIZONTAL CONDUIT RUNS IN ATTIC SHALL BE RUN AS HIGH AS POSSIBLE IN ORDER TO PROVIDE FREE SPACE ABOVE CEILING FOR INSTALLATION OF AIR DISTRIBUTION DUCT AND PIPING.

I. ROUGHING-IN DIMENSIONS OF ELECTRICALLY OPERATED EQUIPMENT WILL BE BY TRADES SUPPLYING SAME. SET CONDUIT AND BOXES FOR CONNECTING TO EQUIPMENT ONLY AFTER RECEIVING APPROVED DIMENSIONS AND AFTER CHECKING LOCATIONS WITH OTHER CONTRACTORS.

J. PLUG THE ENDS OF EACH RACEWAY WITH AN APPROVED CAP, OR CAPPED BUSHING TO PREVENT THE ENTRANCES OF FOREIGN MATERIAL DURING THE CONSTRUCTION PERIOD. CONDUIT LEFT EMPTY FOR FUTURE WIRING SHALL BE CAPPED.

K. ARRANGEMENTS OF CONDUIT WIRING AND EQUIPMENT THAT DIFFER MATERIALLY FROM THE OBVIOUS INTENT OF THE PLANS WILL NOT BE PERMITTED, EXCEPT WHERE NECESSARY TO AVOID INFERENCES AND ONLY WHERE SPECIFICALLY APPROVED BY THE ENGINEER.

L. CONDUIT SHALL BE SIZED AS INDICATED ON THE PLANS AND WHERE NOT INDICATED, SIZES SHALL MEET NEC REQUIREMENTS FOR NUMBER OF CONDUCTORS TO BE ACCOMMODATED. BASED ON TYPE (THHN) INSULATED CONDUCTORS.

M. CONDUITS PROJECTING THROUGH ROOFING SHALL BE MADE WATERTIGHT BY PROPER FLASHING AND PITCH POCKETS WITH STORM COLLAR SECURELY FASTENED TO CONDUIT ABOVE THE FLASHING.

N. SHORT LENGTHS OF FLEXIBLE STEEL CONDUIT, "GREENFIELD", MAY BE USED ABOVE FURRED CEILINGS BETWEEN OUTLET BOXES AND LAY-IN TYPE CEILING FIXTURES.

O. ELECTRICAL METALLIC TUBING 3/4" AND LARGER SHALL BE PROVIDED WITH INSULATED CONNECTORS OR END BUSHINGS.

P. MINIMUM SIZE BRANCH CIRCUIT CONDUIT SHALL BE 1/2" NOMINAL SIZE.

Q. ALL RIGID AND IMC CONDUIT COUPLINGS, FITTINGS AND CONNECTORS SHALL BE THREADED TYPE.

R. WHERE THE CONTRACTOR ELECTS TO USE EITHER RIGID STEEL CONDUIT OR IMC CONDUIT, HE OR SHE SHALL USE ONE OR THE OTHER THROUGHOUT THE PROJECT. DO NOT MIX RIGID STEEL AND IMC CONDUIT.

S. ALL OPENINGS WHERE CONDUIT PENETRATES WALLS OR FLOORS SHALL BE SEALED WATER AND AIRTIGHT.

T. CONNECTORS AND COUPLINGS FOR EMT CONDUIT IN WET OR DAMP LOCATIONS SHALL BE COMPRESSION TYPE. EMT FITTINGS MAY BE DIE-CAST METAL OR STEEL.

U. ALL CONDUIT SHALL BE UL LISTED AND LABELED FOR THE APPLICATION USED.

V. WHERE THE USE OF PVC CONDUIT IS INDICATED, ALL JOINTS SHALL BE SOLVENT WELDED WITH CEMENT FURNISHED BY THE CONDUIT MANUFACTURER. PROVIDE SUITABLE ADAPTERS WHERE PVC CONDUITS ARE COUPLED TO METALLIC CONDUITS. ALL ELBOWS SHALL BE MADE OF GALVANIZED RIGID STEEL CONDUIT.

W. ALL PVC CONDUITS INSTALLED BELOW GRADE SHALL BE ENCASED IN A 3" CONCRETE ENVELOPE.

X. ALL CONDUIT BELOW SLAB OR GRADE SHALL BE PVC AND SHALL BE INSTALLED A MINIMUM OF 1'-0" BELOW SLAB. ALL SLAB PENETRATIONS SHALL BE MADE OF GALVANIZED RIGID STEEL.

### BUILDING WIRE, CABLE AND CONNECTORS

A. BUILDING WIRE AND CONNECTORS SHALL BE UL LISTED AND LABELED, COMPLY WITH NEMA, ICEA, ANSI AND ASTM STANDARDS PERTAINING TO MATERIALS, CONSTRUCTION AND TESTING OF BUILDING WIRED AND CABLE.

B. EXCEPT AS OTHERWISE INDICATED, PROVIDE WIRE, CABLE AND CONNECTORS OF MANUFACTURER'S STANDARD MATERIALS, AS INDICATED BY PUBLISHED PRODUCT INFORMATION, DESIGNED AND CONSTRUCTED AS RECOMMENDED BY MANUFACTURER AND AS REQUIRED FOR THE INSTALLATION.

C. PROVIDE FACTORY FABRICATED 600 VOLT INSULATED BUILDING WIRE OF SIZES, RATINGS, MATERIALS, AND TYPES INDICATED BELOW.

UL TYPE: THHN/THWN
MATERIAL: COPPER
CONDUCTORS: # 10 AWG AND SMALLER: SOLID OR STRANDED
CONDUCTORS: #8 AWG AND LARGER CONCENTRIC-LAY-STRANDED
(STANDARD FLEXIBILITY)

D. CONDUCTOR IDENTIFICATION: CONDUCTORS SHALL BE IDENTIFIED BY COLOR AS FOLLOWS:

240/120 VOLT SYSTEMS

| | |
|---|---|
| A PHASE | BLACK |
| B PHASE | RED |
| NEUTRAL | WHITE |
| EQUIPMENT GROUND | GREEN |
| ISOLATED GROUND | GREEN W/ YELLOW STRIPE |

E. COLOR FOR CONDUCTORS #10 AWG AND SMALLER SHALL BE PERMANENT FACTORY APPLIED. CONDUCTORS #8 AWG AND LARGER SHALL BE BLACK COLOR CODED PHASE TAPE APPLIED AT THE TERMINATIONS. WHERE TYPE MC CABLE IS USED, CIRCUIT NUMBERS SHALL BE APPLIED AT ALL WIRE SPLICES AND TERMINATIONS.

F. INSTALL ELECTRICAL BUILDING WIRES AND CABLES, AS INDICATED, IN COMPLIANCE WITH MANUFACTURER'S WRITTEN INSTRUCTIONS, APPLICABLE REQUIREMENTS OF NEC, AND IN ACCORDANCE WITH RECOGNIZED INDUSTRY PRACTICES.

G. WIRE SHALL BE PROTECTED DURING STORAGE AND HANDLING AND SHALL BE IN FIRST CLASS CONDITION WHEN INSTALLED.

H. NO GREASE OF ANY KIND AND NO COMPOUND OTHER THAN A NEUTRAL LUBRICANT AS APPROVED BY THE WIRE OR CABLE MANUFACTURER SHALL BE USED AS A PULLING COMPOUND.

I. WHEN WIRES ARE INSTALLED IN CONDUIT, SUFFICIENT SLACK SHALL BE ALLOWED TO PERMIT THE CONNECTION OF FIXTURES OR WIRING DEVICES WITHOUT ADDITIONAL SPLICE.

J. ALL CONDUCTORS SHALL BE CONTINUOUS FROM OUTLET TO OUTLET OR FROM PANEL TO OUTLET OR DEVICE. NO SPLICES WILL BE PERMITTED IN CONDUIT RUNS.

K. FEEDERS SHALL BE RUN IN INDIVIDUAL CONDUITS FROM THE FEEDER SOURCE TO THE LOAD TERMINATIONS, AS INDICATED ON THE DRAWINGS, DO NOT COMBINE MULTIPLE FEEDERS IN A WIREWAY OR JUNCTION BOX.

L. USE COMPRESSION TYPE WIRE CONNECTORS FOR STRANDED CONDUCTORS, FOR MOTOR CONNECTIONS, AND ALL OTHER CONNECTIONS OR SPLICES SUBJECT TO VIBRATION. WIRE NUTS MAY BE USED ELSEWHERE.

M. BRANCH CIRCUITS FOR MOTORS, AS INDICATED ON THE DRAWINGS, ARE APPROXIMATE SIZE ONLY. THIS CONTRACTOR IS CAUTIONED TO OBTAIN THE EXACT RATING OF THE MOTOR OPERATED EQUIPMENT FROM THE MECHANICAL CONTRACTOR AND HE OR SHE SHALL ADJUST THE SIZE OF THE PROTECTIVE DEVICE AND WIRE TO CONFORM TO THE REQUIREMENTS OF THE EQUIPMENT. ALL SUCH CHANGES SHALL BE SUBMITTED TO THE ENGINEER FOR APPROVAL.

N. AT EACH OUTLET LOCATION, THE TERMINATING CONDUCTORS SHALL BE LEFT NOT LESS THAN 8" LONG WITHIN THE OUTLETS.

O. USE PULLING MEANS, INCLUDING FISH TAPE, CABLE, OR ROPE WHICH CANNOT DAMAGE RACEWAY.

P. TORQUE ALL BOLTED LUGS AND CONNECTORS TO TORQUE VALUES RECOMMEND BY THE EQUIPMENT MANUFACTURER. WHERE TORQUE VALUES ARE NOT GIVEN, USE APPLICABLE TORQUE VALUES GIVEN BY UL STANDARDS #486A AND #486B.

Q. AS FAR AS POSSIBLE, CONDUCTORS SHALL BE PULLED THROUGH WITHOUT SPLICE. WHERE SPLICES ARE NECESSARY AND APPROVED BY THE ENGINEER, THEY SHALL BE MADE IN JUNCTION OR PULL BOXES ONLY.

R. MINIMUM SIZE BRANCH CIRCUIT CONDUCTOR SHALL BE #12 AWG.

S. FIELD CONNECTIONS AT PANELBOARDS SHALL PROVIDE THE PROPER PHASE RELATIONSHIP, AS INDICATED ON THE DRAWINGS, OR AS SPECIFIED HEREIN.

### BOXES AND FITTINGS

A. IN GENERAL, APPLICATION OF ELECTRICAL BOX AND ELECTRICAL FITTING WORK IS INDICATED BY THE DRAWINGS, SCHEDULES AND THESE SPECIFICATIONS. PROVIDE ADDITIONAL ELECTRICAL BOXES AND FITTINGS AS MAY BE REQUIRED FOR A COMPLETE ELECTRICAL INSTALLATION.

B. TYPES OF ELECTRICAL BOXES AND FITTING S IN THIS SECTION INCLUDE THE FOLLOWING:

1. OUTLET BOXES
2. JUNCTION BOXES
3. PULL BOXES
4. CONDUIT BODIES
5. BUSHINGS
6. LOCKNUTS

C. COMPLY WITH NEC AS APPLICABLE TO CONSTRUCTION AND INSTALLATION OF ELECTRICAL WIRING BOXES AND FITTINGS.

D. PROVIDE ELECTRICAL BOXES AND FITTINGS, WHICH HAVE BEEN UL LISTED AND LABELED AND COMPLY WITH THE FOLLOWING STANDARDS:

1. STANDARD NO. 50: ELECTRICAL CABINETS AND BOXES
2. ANSI C 134.1 SHEET STEEL OUTLET BOXES, DEVICE BOXES, COVERS AND BOX SUPPORTS.

E. PROVIDE GALVANIZED PRESSED STEEL INTERIOR OUTLET WIRING BOXES, OF TYPES, SHAPES, AND SIZES, INCLUDING BOX DEPTHS, TO SUIT EACH RESPECTIVE LOCATION AND INSTALLATION, AND WITH THREADED SCREW HOLES WITH CORROSION RESISTANT SCREWS FOR SECURING BOX COVERS AND WIRING DEVICES.

F. PROVIDE OUTLET BOX ACCESSORIES AS REQUIRED FOR EACH INSTALLATION, INCLUDING MOUNTING BRACKETS, WALL BOARD HANGERS, EXTENSION RINGS, FIXTURE STUDS, CABLE CLAMPS, AND METAL STRAPS FOR SUPPORTING OUTLET BOXES, WHICH ARE COMPATIBLE WITH OUTLET BOXES BEING USED AND WHICH FULFILL REQUIREMENTS OF INDIVIDUAL WIRING SITUATIONS.

G. PROVIDE GALVANIZED CODE GAUGE SHEET STEEL JUNCTION AND PULL BOXES WITH SCREW-ON COVERS AND WELDED SEAMS. DO NOT USE KNOCKOUT TYPE BOXES FOR ANY APPLICATION IN SIZES LARGER THAN 4-11/16".

H. PULL BOXES FOR STRAIGHT RUNS SHALL BE O-Z/GEDNEY TYPE PB, OR APPROVED EQUAL.

I. PROVIDE CORROSION-RESISTANT PUNCHED-STEEL BOX KNOCKOUT CLOSURES, CONDUIT LOCKNUTS AND MALLEABLE IRON CONDUIT BUSHINGS, OFFSET CONNECTORS OF TYPES AND SIZES TO SUIT RESPECTIVE USE AND INSTALLATION BUSHINGS FOR ALL CONDUIT CONTAINING CONDUCTORS #3 AWG AND LARGER SHALL BE INSULATED TYPE CONFORMING TO UL 514.

J. BUSHINGS FOR CONDUIT TERMINATIONS WHERE CONDUIT ENTERS OR EQUIPMENT FROM UNDERGROUND SHALL BE O-Z/GEDNEY CO., TYPE CSB SERIES, OR APPROVED EQUAL.

K. INSTALL ELECTRICAL BOXES AND FITTINGS, WHERE INDICATED OR REQUIRED, COMPLYING WITH APPLICABLE REQUIREMENTS OF NEC AND NECA "STANDARD OF INSTILLATION", AND IN COMPLIANCE WITH RECOGNIZED INDUSTRY PRACTICES, TO ENSURE THAT PRODUCTS FULFILL REQUIREMENTS.

L. PROVIDE KNOCKOUT CLOSURES AT UNUSED KNOCKOUT HOLES WHERE BLANKS HAVE BEEN REMOVED.

M. PROVIDE SEPARATE STRUCTURAL SUPPORTS FOR ALL BOXES AND PULL BOXES IN ACCORDANCE WITH CODE REQUIREMENTS.

N. PROVIDE CAST METAL WEATHERPROOF OUTLETS FOR LOCATIONS EXPOSED TO WEATHER OR MOISTURE.

O. FLOOR BOXES SHALL BE CAST-IRON, FLUSH TYPE, WITH BRASS FLOOR INSETS.

P. FOR EXPOSED WORK USE CAST METAL BOXES WITH SCREWED HUBS FOR ALL BRANCH CIRCUIT OUTLET, DEVICE AND PULL BOXES.

Q. TEMPORARY COVERS SHALL BE PROVIDED AT ALL OUTLET BOX LOCATIONS DURING CONSTRUCTION TO PREVENT ENTRANCE OF DIRT, PLASTER, ETC., BEFORE WIRING DEVICE IS INSTALLED.

R. EXCEPT WHERE INDICATED OTHERWISE ON THE DRAWINGS, OUTLET BOXES SHALL BE SO LOCATED AS TO ALLOW THE ASSOCIATED DEVICE OR FIXTURE TO BE MOUNTED AT LOCATIONS SPECIFIED BELOW:

1. CEILING LIGHTING FIXTURES – SYMMETRICALLY IN CEILING, OR AS INDICATED ON THE PLANS.
2. RECEPTACLES – 4'-0" ABOVE FLOOR IN UTILITY AREAS; 1'-6" ABOVE FINISHED FLOOR EXCEPT WHERE INDICATED OTHERWISE.
3. WALL SWITCHES – 4'-0" ABOVE FINISHED FLOOR EXCEPT WHERE INDICATED OTHERWISE.
4. OUTLETS FOR TELEPHONE/DATA – SAME AS RECEPTACLES, EXCEPT WALL MOUNTED PHONE OUTLETS SHALL BE 4'-6" AFF.
5. OUTLETS FOR OTHER DEVICES – AS INDICATED ON DRAWINGS.

S. PROVIDE PULL BOXES AND JUNCTION BOXES, AS INDICATED ON THE PLANS, OR AS REQUIRED BOXES SHALL BE SIZED A S INDICATED ON THE PLANS AND WHERE NOT INDICATED, THEY SHALL BE SIZED IN ACCORDANCE WITH THE NATIONAL ELECTRICAL CODE.

T. PROVIDE COVER PLATES FOR ALL OUTLET BOXES.

U. IN ALL CASES, WHERE TWO OR MORE DEVICES ARE INSTALLED IN GANG BOXES, GANG PLATES WITH SUITABLE OPENINGS SHALL BE PROVIDED.

### WIRING DEVICES

A. SUBJECT TO COMPLIANCE WITH REQUIREMENTS, PROVIDE THE FOLLOWING PRODUCTS, OR AN APPROVED EQUAL:

1. TOGGLE SWITCHES: 20 AMPERE, 120-277 VOLT, AC ONLY, QUIET TYPE, INDUSTRIAL SPECIFICATION GRADE.
2. GENERAL PURPOSE RECEPTACLES: NEMA 5-20R, GROUNDING TYPE, INDUSTRIAL SPECIFICATION GRADE.
3. DEDICATED USE RECEPTACLES: NEMA 5-20R, GROUNDING TYPE, INDUSTRIAL SPECIFICATION GRADE.
4. GROUND FAULT CIRCUIT INTERRUPTING RECEPTACLES: NEMA 5-20R, GROUNDING TYPE, INDUSTRIAL SPECIFICATION GRADE.

B. COORDINATE DEVICE FINISH COLORS WITH ARCHITECT.

C. PROVIDE COVERPLATES FOR ALL WIRING DEVICES PROVIDE BLANK OUTLET PLATES FOR ALL TELEPHONE, DATA AND OTHER BLANK OUTLET BOXES. PROVIDE METAL SCREWS FOR SECURING PLATES TO DEVICES.

D. MULTIPLE OUTLETS SHALL BE PROVIDED WITH MULTIPLE GANG PLATES OF ONE-PIECE CONSTRUCTION.

E. COVERPLATES FOR ALL SURFACE MOUNTED DEVICES INSTALLED IN CAST METAL BOXES SHALL BE GALVANIZED SHEET METAL PLATES SPECIFICALLY DESIGNED FOR USE WITH CAST METAL BOXES.

F. COVERPLATES FOR ALL FLUSH MOUNTED DEVICES SHALL BE HIGH-IMPACT UNBREAKABLE NYLON. COORDINATE FINISH COLOR WITH ARCHITECT.

G. COVERPLATES FOR ALL SURFACE MOUNTED DEVICES INSTALLED IN CAST METAL BOXES SHALL BE STAINLESS STEEL.

H. COVERPLATES FOR OUTDOOR GFI DUPLEX RECEPTACLES SHALL BE COPPER WIRING DEVICES WEATHERBOX IN-USE TYPE COVER OR APPROVED EQUAL.

### PANELBOARDS

A. PANELBOARDS SHALL BE OF DEAD-FRONT CONSTRUCTION EQUIPPED WITH THERMAL-MAGNETIC MOLDED CASE CIRCUIT BREAKERS AS INDICATED ON THE SCHEDULES AND AS SPECIFIED HEREIN.

B. BUS BARS FOR PANELBOARDS SHALL BE COPPER.

C. 240/120V, 1-PHASE, 3-WIRE S/N LIGHTING AND APPLIANCE PANELBOARDS SHALL BE SQUARE D COMPANY TYPE NQOD, OR APPROVED EQUAL, EQUIPPED WITH BOLT-ON THERMAL-MAGNETIC CIRCUIT BREAKERS. BREAKERS SHALL BE EQUIPPED WITH INTERNAL CROSSBAR TO ASSURE SIMULTANEOUS OPENING OF ALL POLES IN MULTIPOLE CIRCUIT BREAKERS. BUILT-ON CIRCUIT BREAKERS SHALL BE ABLE TO BE INSTALLED IN SAME PANELBOARDS WITHOUT REQUIRING ADDITIONAL HARDWARE. CIRCUIT BREAKERS SHALL BE RATED 240V WITH CONTINUOUS CURRENT RATINGS, AS NOTED ON THE DRAWINGS. INTERRUPTING RATING SHALL BE AS INDICATED ON DRAWINGS, ALL CIRCUIT BREAKERS SERVING HID LIGHTING LOADS SHALL BE THE "SWD" TYPE, ALL CIRCUIT BREAKERS SERVING EMERGENCY AND/OR LIFE SAFETY EQUIPMENT WITH HANDLE LOCK DEVICES, EACH PANELBOARD SHALL BE EQUIPPED WITH A BARE UNINSULATED EQUIPMENT GROUNDING BAR FOR USE IN TERMINATING SEPARATE EQUIPMENT GROUNDING CONDUCTORS.

D. PROVIDE GALVANIZED SHEET STEEL CABINET TYPE ENCLOSURES FOR ALL PANELBOARDS IN SIZES AND NEMA TYPES, AS INDICATED, RIGIDITY AND GAUGE OF STEEL TO BE AS SPECIFIED IN UL STANDARD 50 FOR CABINETS, WIRING CUTTER SPACE TO BE IN ACCORDANCE WITH UL STANDARD 67 FOR PANELBOARDS, AS A MINIMUM. ALL PANELBOARDS SHALL BE SUPPLIED WITH FRONT PANEL, INCLUDING A DOOR WITH FLUSH CYLINDER TUMBLER TYPE LOCK WITH KEYED ALIKE, FRONTS SHALL HAVE ADJUSTABLE INDICATING TRIM CLAMPS WHICH SHALL BE COMPLETELY CONCEALED WHEN DOORS ARE CLOSED. DOORS SHALL BE MOUNTED WITH COMPLETELY CONCEALED STEEL HINGES. FRONTS SHALL NOT BE REMOVABLE WITH DOOR IN LOCKED POSITION. A CIRCUIT DIRECTORY FRAME AND CARD WITH CLEAR PLASTIC COVERING SHALL BE PROVIDED ON THE INSIDE OF THE DOOR. EACH PANELBOARD SHALL BE FURNISHED WITH HINGED TRIM OPTION.

E. MOUNT ALL PANELS SO THAT TOP SWITCH OR BREAKER HANDLE IS NO MORE THAN 6'-7" ABOVE THE FINISHED FLOOR LINE, BOTTOM BREAKER OR SWITCH SHALL BE NO LESS THAN 24" ABOVE FINISHED FLOOR.

F. TYPE IN PANELBOARD'S CIRCUIT DIRECTORY CARD UPON COMPLETION OF INSTALLATION WORK.

### CIRCUIT AND MOTOR DISCONNECTS

A. ALL DISCONNECT SWITCHES SHALL BE NEMA TYPE HD AND UL LISTED, 240 VOLT OR 600 VOLT RATING AS REQUIRED.

B. SWITCHES SHALL HAVE BLADES WHICH ARE FULLY VISIBLE IN THE "OFF" POSITION WHEN SWITCH DOOR IS OPEN. LUGS SHALL BE FRONT REMOVABLE AND UL LISTED FOR 75°C COPPER WIRES.

C. SWITCHES SHALL BE QUICK-MAKE, QUICK-BREAK, SWITCHES SHALL HAVE PROVISIONS FOR PADLOCKING IN THE "OFF" POSITION WITH AT LEAST THREE LOCKS, SWITCHES SHALL HAVE DUAL COVER INTERLOCK TO PREVENT UNAUTHORIZED OPENING OF THE SWITCH DOOR WHEN THE HANDLE IS IN THE "ON" POSITION, AND TO PREVENT CLOSING OF THE SWITCH MECHANISM WITH THE DOOR OPEN, THE HANDLE POSITION SHALL INDICATE WHETHER THE SWITCH IS "ON" OR "OFF".

D. EXCEPT WHERE INDICATED OTHERWISE, SWITCHES FOR USE INDOORS SHALL BE MOUNTED IN NEMA TYPE 1 SHEET METAL ENCLOSURES, AND SWITCHES FOR USE OUTDOORS SHALL BE MOUNTED IN NEMA TYPE 3R RAIN-TIGHT ENCLOSURES.

E. ALL FUSIBLE SWITCHES SHALL BE FURNISHED WITH FUSE CLIPS FOR CLASS R FUSES AND SHALL BE EQUIPPED WITH PROPER REJECTION CLIPS TO PREVENT THE USE OF CLASS H FUSES.

F. WHERE SWITCHES ARE USED AS MOTOR BRANCH CIRCUIT DISCONNECTS, AND WHERE A SEPARATE CONTROL CIRCUIT IS USED, THE DISCONNECT SWITCH SHALL HAVE AUXILIARY CONTACTS FOR BREAKING THE CONTROL CIRCUIT WHEN DISCONNECT SWITCH IS IN THE OPEN POSITION.

G. FURNISH AND INSTALL DISCONNECT SWITCHES WHERE INDICATED ON THE DRAWINGS AND/OR WHERE REQUIRED BY CODE. DISCONNECT SWITCHES SHALL BE FUSIBLE OR NON-FUSIBLE, AS INDICATED, OR REQUIRED, TO PROVIDE THE REQUIRED DISCONNECT MEANS AND/OR BRANCH CIRCUIT PROTECTION.

H. DISCONNECT SWITCHES SHALL BE AS MANUFACTURED BY SQUARE D OR APPROVED EQUAL.

### SUPPORTING DEVICES

A. PROVIDE SUPPORT FOR ALL ELECTRICAL WORK AS INDICATED ON THE DRAWINGS, AS SPECIFIED HEREIN, OR AS REQUIRED BY CODE.

B. COMPLY WITH NEC AS APPLICABLE TO CONSTRUCTION AND INSTALLATION OF ELECTRICAL SUPPORTING DEVICES.

C. COMPLY WITH APPLICABLE REQUIREMENTS OF ANSI/NEMA STD. PUB. NO. FB 1, "FITTINGS AND SUPPORTS FOR CONDUIT AND CABLE ASSEMBLIES".

D. COMPLY WITH APPLICABLE MSS STANDARD REQUIREMENTS PERTAINING TO FABRICATION AND INSTALLATION PRACTICES FOR PIPE HANGERS AND SUPPORTS.

E. COMPLY WITH THE NATIONAL ELECTRICAL CONTRACTORS ASSOCIATION "STANDARD OF INSTALLATION" PERTAINING TO ANCHORS, FASTENERS, HANGERS, SUPPORTS AND EQUIPMENT MOUNTING.

F. WHERE MANUFACTURED SUPPORTING DEVICES ARE PROVIDED, THEY SHALL COMPLY WITH MANUFACTURER'S STANDARD MATERIALS, DESIGN, AND CONSTRUCTION IN ACCORDANCE WITH PUBLISHED PRODUCT INFORMATION.

G. PROVIDE U-CHANNEL STRUT SYSTEM FOR SUPPORTING SURFACE MOUNTED ELECTRICAL EQUIPMENT, 12 GAUGE MINIMUM SIZE HOT-DIPPED GALVANIZED STEEL OF TYPES AND SIZES INDICATED (UNISTRUT P-1000 MINIMUM SIZE).

H. FURNISHED AND INSTALL ALL NECESSARY HANGERS, SUPPORTS, ETC., AS REQUIRED, FOR RIGIDLY AND SECURELY MOUNTING ALL SWITCHES, CONNECTOR BOXES, LIGHTING FIXTURES, PANELBOARDS, PULL BOXES, CONDUIT, OUTLET BOXES, AND ALL OTHER ITEMS OF ELECTRICAL WORK INCLUDED IN THIS PROJECT.

I. ALL HANGERS AND SUPPORTS SHALL BE FASTENED TO THE BUILDING STRUCTURE BY MEANS OF BOLTS, U-CHANNEL STRUT SYSTEM, ANCHORS AND RODS, OR OTHER APPROVED MEANS.

J. TYPE MC CABLES SHALL BE SUPPORTED WITHIN 12 INCHES OF EVERY JUNCTION OR OUTLET BOX, AND AT INTERVALS NOT TO EXCEED 6'-0" IN ACCORDANCE WITH THE NEC.

K. LIGHTING FIXTURES SHALL BE SECURELY SUPPORTED FROM THE BUILDING STRUCTURE, AS INDICATED ON THE DRAWINGS OR AS SPECIFIED HEREIN.

L. DO NOT USE PERFORATED STRAP IRON HANGERS ON THIS PROJECT FOR ANY PURPOSE.

M. SUPPORT BOXES FROM BUILDING STRUCTURE IN AN APPROVED MANNER, MAKE SUPPORT INDEPENDENT OF CONDUIT TO WHICH THEY ARE CONNECTED. ROD HANGERS SHALL BE USED WHERE SUITABLE, WHERE ROD HANGERS ARE NOT SUITABLE, PROVIDE U-CHANNEL STRUT SUPPORTS FROM BUILDING STRUCTURE.

N. WHERE MULTIPLE RUNS OF EXPOSED CONDUIT ARE REQUIRED, PROVIDE UNSTRUT SUPPORTS FOR CONDUIT.

O. WHERE CONDUIT IS SUPPORTED BY SUSPENDED HANGERS, THE TOTAL LENGTH TO THE BOTTOM OF THE HANGER SHALL NOT EXCEED 12", OR PROVISION SHALL BE MADE FOR THE SUPPORT OF REQUIRED SEISMIC LOADING.

P. ALL SUPPORT SYSTEMS UTILIZED ON THIS PROJECT SHALL EMPLOY SCREWS OR BOLTS AND NUTS TO SECURE CABLES, CONDUIT, AND CONDUIT SUPPORT.

### SEISMIC RESTRAINTS

A. INSTALL SEISMIC SUPPORTS FOR ALL NEW ELECTRICAL SYSTEMS AS REQUIRED BY 2003 IBC, ASCE 7, AND LOCAL AUTHORITY HAVING JURISDICTION. REFER TO STRUCTURAL DRAWINGS FOR SEISMIC CLASSIFICATIONS, SECURE THE SERVICES OF AN ENGINEER REGISTERED IN THE STATE OF LOUISIANA TO PROVIDE CALCULATIONS AND SEALED DRAWINGS OF ALL SEISMIC SUPPORT SYSTEMS.

B. SEISMIC RESTRAINT MATERIALS SHALL BE AS MANUFACTURED BY B-LINE SYSTEMS, MASON INDUSTRIES, OR APPROVED EQUAL.

### ELECTRICAL IDENTIFICATION

A. FURNISH AND INSTALL A CONDUCTOR IDENTIFICATION BAND ON EACH CONDUCTOR IN EACH BOX/ENCLOSURE/CABINET WHERE WIRES OF MORE THAN ONE CIRCUIT ARE PRESENT, EXCEPT WHERE ANOTHER FORM OF IDENTIFICATION, SUCH AS COLOR CODED CONDUCTORS IS PROVIDED. CONDUCTOR IDENTIFICATION BANDS SHALL BE T & B TYPE E-Z, OR APPROVED EQUAL.

B. INSTALL A CONTINUOUS UNDERGROUND PLASTIC CABLE MARKER TAPE A MINIMUM OF 12 INCHES ABOVE ALL UNDERGROUND ELECTRICAL LINES. CABLE MARKER TAPE SHALL BE AS MANUFACTURED BY ALLEN, OR APPROVED EQUAL. THE TAPE SHALL BE HEAVY GAUGE POLYETHYLENE FILM (40 MIL THICKNESS), 6" WIDE, BRIGHT YELLOW IN COLOR WITH A CONTINUOUS MESSAGE DESIGNATING A BURIED ELECTRIC LINE BELOW.

C. FURNISH AND INSTALL AN ENGRAVED PLASTIC LAMINATE IDENTIFICATION PLATE AT EACH PANELBOARD AND DISCONNECT SWITCH, SECURE WITH STAINLESS STEEL SCREWS, INCLUDE THE FOLLOWING INFORMATION:

1. DISTRIBUTION LIGHTING AND APPLIANCE PANELBOARDS – PANEL NAME IN 1/4" LETTERS, VOLTAGE AND PHASE IN 1/8" LETTERS (E.G., "PANEL M, 120/208V, 3-PHASE, 4 WIRE").
2. EACH SEPARATE SWITCH UNIT AT DISTRIBUTION PANELS – CIRCUIT NUMBER AND LOAD SERVED IN 1/8" LETTERS (E.G., "#13, PANEL A").
3. EACH DISCONNECT SWITCH – LOAD SERVED, VOLTAGE AND PHASE, PANEL AND CIRCUIT NUMBER IN 1/8" LETTERS (E.G., "ACU-1, 208V, 3-PHASE, M-6").

### GROUNDING

A. FURNISH AND INSTALL SYSTEM ENCLOSURE, AND EQUIPMENT GROUNDING FOR ALL ELECTRIC WIRING FOR THE BUILDING IN FULL COMPLIANCE WITH THE REQUIREMENTS OF LOCAL CODES AND THE NEC. ALL GROUNDING CONDUCTORS SHALL BE COPPER.

B. PROVIDE GROUNDING PRODUCTS THAT ARE UL LISTED AND LEVELED AND COMPLY WITH ESTABLISHED INDUSTRY STANDARDS FOR APPLICATIONS INDICATED.

C. GROUND RODS SHALL BE STEEL WITH COPPER WELDED EXTERIOR, 3/4 INCH DIA. X 10 FEET.

D. A CONTINUOUS (GREEN) EQUIPMENT GROUNDING CONDUCTOR SHALL BE PROVIDED WITH ALL FEEDERS AND BRANCH CIRCUITS. THIS GROUNDING CONDUCTOR SHALL BE INSULATED SAME AS REQUIRED FOR 600 VOLT PHASE CONDUCTORS AND SHALL BE GREEN IN COLOR, WHERE POSSIBLE, GROUNDING CONDUCTOR SHALL BE SIZED IN ACCORDANCE WITH ARTICLE 250 OF THE NEC AND SHALL TERMINATE BY MEANS OF COMPRESSION LUGS AT EACH GROUND BUS, PANELBOARD GROUNDING BAR, PULL BOXES, DISCONNECT SWITCHES, STARTERS, MOTORS, AND OTHER DEVICES.

E. WHERE SHORT LENGTHS OF FLEXIBLE STEEL CONDUIT ARE USED BETWEEN OUTLET BOXES IN HUNG OR FURRED CEILING AND FLUSH LIGHTING FIXTURES, THE LIGHTING FIXTURE SHALL BE GROUNDED BY MEANS OF A SEPARATE #12 AWG COPPER (GREEN) COLORED INSULATED GROUNDING WIRE RUN WITH THE CIRCUIT CONDUCTORS IN THE FLEXIBLE STEEL CONDUIT AND APPROVED SOLDERLESS GROUNDING LUG OR CONNECTOR.

### LIGHTING

A. PROVIDE ONLY LIGHTING FIXTURES, EXIT SIGNS AND EMERGENCY LIGHTING UNITS WHICH ARE UL LISTED AND LABELED.

B. PROVIDE ELECTRONIC FLUORESCENT BALLASTS WHICH ARE HIGH POWER FACTOR (.90 OR ABOVE) AND THERMALLY PROTECTED WITH AN "X" SOUND RATING. BALLASTS SHALL BE OF ENERGY SAVING DESIGN, ELECTRONIC BALLASTS SHALL HAVE NOT MORE THAN 20 PERCENT HARMONIC DISTORTION, CERTIFIED BY THE MANUFACTURER.

C. LAMPS SHALL BE SYLVANIA GE., PHILIPS, OR APPROVED EQUAL. REFER TO LAMP SECTION OF LIGHTING FIXTURE SCHEDULE.

D. BATTERY OPERATED FLUORESCENT EMERGENCY LIGHTING BALLASTS SHALL BE PERMANENTLY WIRED TO THE BUILDING ELECTRICAL SYSTEM, WHERE INSTALLED IN SWITCHED FIXTURES, EMERGENCY BALLASTS AND BATTERIES SHALL BE WIRED UNSWITCHED, AND NORMAL POWER BALLASTS SHALL BE WIRED SWITCHED.

E. INSTALL PHOTOELECTRIC CONTROLS FOR CONTROL OF LIGHTING AS INDICATED ON THE PLANS.

F. CLEAN LIGHTING FIXTURES OF DIRT AND DEBRIS UPON COMPLETION OF THE INSTALLATION. PROTECT INSTALLED FIXTURES FROM DAMAGE DURING REMAINDER OF CONSTRUCTION PERIOD.

G. AT THE TIME OF SUBSTANTIAL COMPLETION, REPLACE DEFECTIVE OR BURNED OUT LAMPS IN ALL LIGHTING FIXTURES.

H. PROVIDE TO THE OWNER 10 PERCENT SPARE LAMPS OF EACH TYPE INSTALLED.

### WIRING AND PLUMBING EQUIPMENT

A. FURNISH AND INSTALL ALL LINE VOLTAGE POWER WIRING FOR PLUMBING EQUIPMENT. FURNISH AND INSTALL DISCONNECT SWITCHES AS INDICATED OR REQUIRED.

B. CONNECTIONS TO EQUIPMENT SUBJECT TO MOVEMENT OR VIBRATION SHALL BE MADE WITH LIQUID-TIGHT FLEXIBLE CONDUIT.

### EMPTY CONDUIT SYSTEM FOR TELEPHONES AND DATA

A. FURNISH AND INSTALL AN EMPTY CONDUIT SYSTEM FOR TELEPHONE AND DATA OUTLETS AS INDICATED.

B. FURNISH AND INSTALL A BLANK COVERPLATE AT EACH OUTLET.

C. 3/4" MINIMUM EMT CONDUIT SHALL BE STUBBED UP INTO ACCESSIBLE CEILING SPACE FROM EACH TELEPHONE AND/OR DATA OUTLET. PROVIDE AN INSULATED BUSHING FOR EACH STUB-UP.

### WIRING FOR HVAC EQUIPMENT

A. FURNISH AND INSTALL ALL LINE VOLTAGE POWER, INTERLOCK AND TEMPERATURE CONTROL WIRING FOR HEATING, VENTILATING AND AIR CONDITIONING EQUIPMENT. FURNISH AND INSTALL DISCONNECT SWITCHES AS INDICATED OR REQUIRED.

B. THE HVAC CONTRACTOR IS RESPONSIBLE FOR FURNISHING THE ELECTRICAL CONTRACTOR WITH MANUFACTURER'S WIRING DIAGRAMS FOR PROPER OPERATION OF THE HVAC EQUIPMENT.

C. CONNECTION TO HVAC EQUIPMENT SUBJECT TO MOVEMENT OR VIBRATION SHALL BE MADE WITH LIQUID-TIGHT FLEXIBLE CONDUIT.

D. ALL WIRING INSTALLED OUTDOORS SHALL BE IN GALVANIZED RIGID STEEL CONDUIT USING WEATHERPROOF GASKETED CAST METAL BOXES.

PRELIMINARY DOCUMENT
NOT INTENDED FOR CONSTRUCTION, BIDDING, SALES OR ISSUANCE OF A PERMIT

NOBLES & ASSOCIATES L.L.C.
PROFESSIONAL ENGINEERS, LAND SURVEYORS, & DESIGNERS
562 COLUMBIA STREET, BOGALUSA, LA. 70427 P: 985-723-0380
800 MARINER'S PLAZA, SUITE 808, MANDEVILLE, LA. 70448 P: 985-727-7221

NEW BUILDING FOR
SUPERIOR AVENUE CHURCH
SANCTUARY
HIGHWAY 21, BOGALUSA, LA 70427

| Rev. No. | Date | Description |
|---|---|---|
| | | |

ENGINEER OF RECORD
NAME GEORGE NOBLES
NUMBER 31767

ELECTRICAL NOTES

| | |
|---|---|
| Job No. | E-00165 |
| Dwn. SWL | Chk. GBN |
| Date 01/25/2022 | Rev. REV. 0 |

E104
Sheet 1 Of *

THESE DRAWINGS ARE THE SOLE PROPERTY OF NOBLES & ASSOCIATES L.L.C., AND ARE ISSUED AS INSTRUMENTS OF SERVICE. THESE DRAWINGS SHALL NOT BE COPIED, REPRODUCED OR USED IN ANY MANNER WITHOUT WRITTEN CONSENT OF NOBLES & ASSOCIATES L.L.C.

COPYRIGHT 2021, NOBLES & ASSOCIATES, L.L.C.

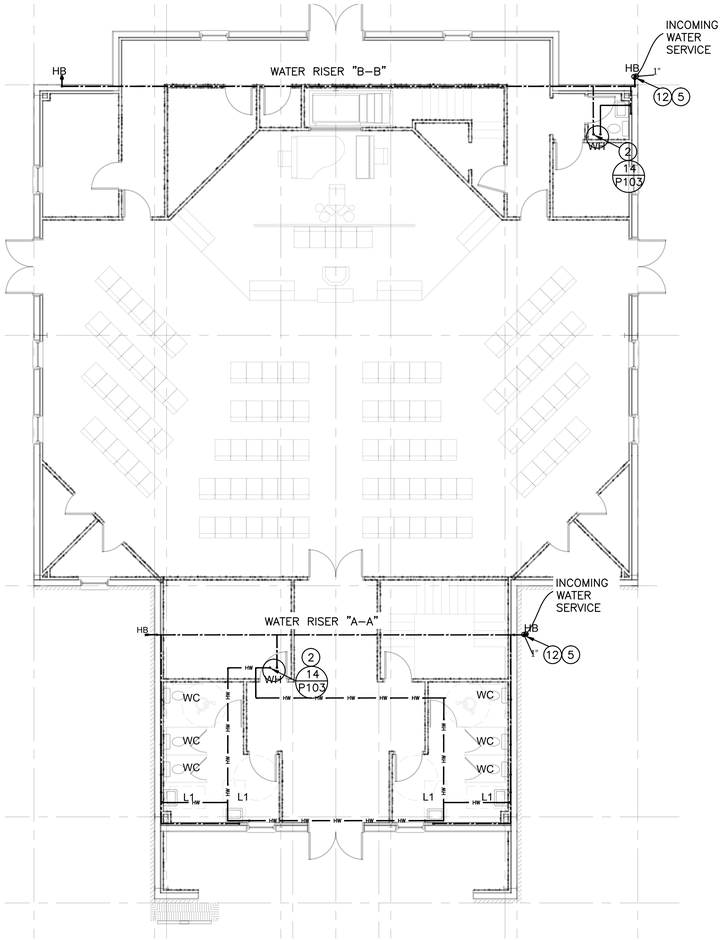


1 P101 WATER PLAN
SCALE: 1/8"=1'

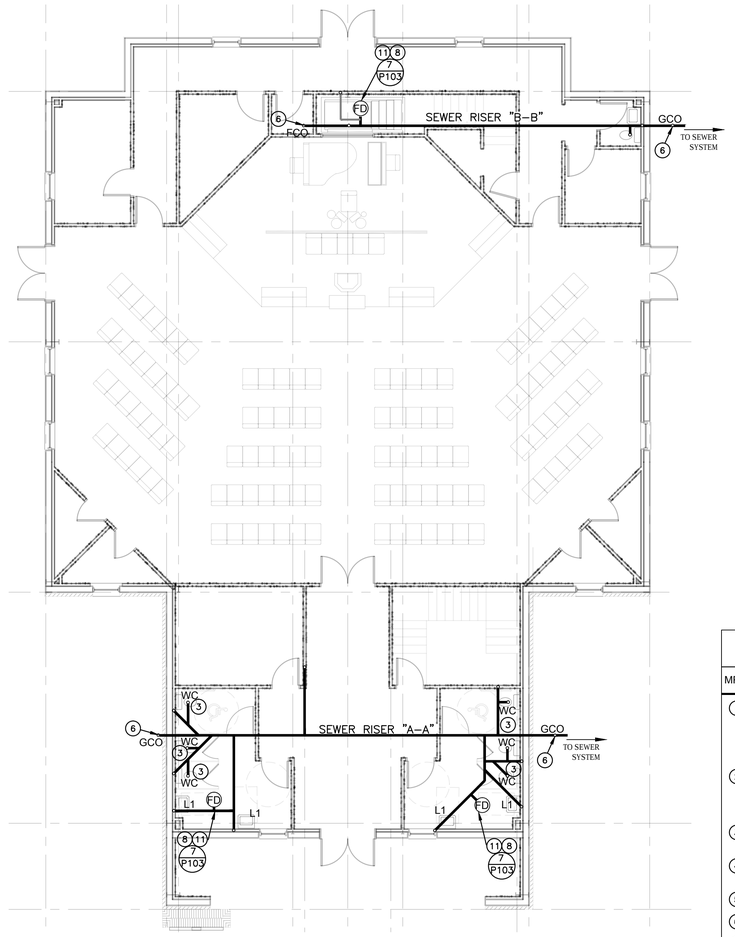


2 P101 SEWER PLAN
SCALE: 1/8"=1'

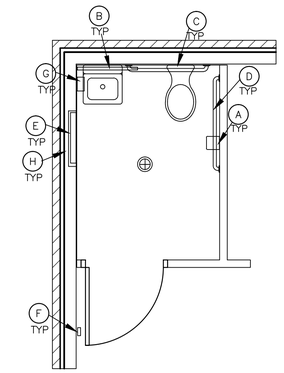


3 P101 TYP. RESTROOM ACCESSORIES
SCALE: NTS

PRELIMINARY DOCUMENT
NOT INTENDED FOR CONSTRUCTION,
BIDDING, SALES OR ISSUANCE OF A PERMIT

## PLUMBING KEYED NOTES

| MRK | DESCRIPTION |
|---|---|
| 1 | NEW WATER CLOSETS, AND LAVATORIES TO BE FURNISHED AND INSTALLED BY PLUMBING CONTRACTOR. VERIFY EXACT LOCATION OF EXISTING SANITARY SEWER LINE AND SERVICE WATER LINE, PLUMBING CONTRACTOR SHALL FURNISHED ALL NECESSARY COUPLINGS/FITTINGS TO TIE–IN TO EXISTING SEWER CONNECTION. VERIFY EXISTING SEWER PIPE SIZE AND TYPE PRIOR TO BID. |
| 2 | NEW 50 GALLON ELECTRIC WATER HEATER LOCATED ON PLATFORM ABOVE TOILET CEILING, VERIFY EXACT LOCATION. INSTALL NEW DRAIN PAN AND DRAIN TO APPROVED RECEPTACLE LOCATION. COORDINATE WITH ELECTRICAL CONTRACTOR FOR FINAL ELELCTRICAL CONNECTION OF WATER HEATER AS REQUIRED. |
| 3 | NEW HANDICAPPED WATER CLOSET SUPPLIED AND INSTALLED BY PLUMBING CONTRACTOR. REFER TO SCHEDULE FOR ADDITIONAL INFORMATION. |
| 4 | NEW HANDICAPPED LAVATORY SUPPLIED AND INSTALLED BY PLUMBING CONTRACTOR. REFER TO SCHEDULE FOR ADDITIONAL INFORMATION. |
| 5 | NEW COLD WATER MAIN. FIELD VERIFY EXACT LOCATION AND SIZE. |
| 6 | NEW SANITARY SEWER MAIN. FIELD VERIFY EXACT LOCATION AND SIZE. |
| 7 | NEW 3" VENT THRU ROOF. REFER TO DETAILS. |
| 8 | NEW 3" FLOOR DRAIN. REFER TO SCHEDULE AND DETAIL FOR ADDITIONAL INFORMATION. |
| 9 | NEW CLEANOUT. REFER TO SANITARY RISER DIAGRAM AND DETAIL FOR ADDITIONAL INFORMATION. |
| 10 | DELETED |
| 10 | INSTALL NEW WATTS MODEL #A220S/LF (OR APPROVED EQUAL) TRAP PRIMER AS REQUIRED. FIXTURE SUPPLIED AND INSTALLED BY PLUMBING CONTRACTOR. REFER TO DETAIL AND SCHEDULE FOR ADDITIONAL INFORMATION. |
| 11 | TIE TO EXISTING WATER CONNECTION BY PLUMBING CONTRACTOR AS REQUIRED. COORDINATE EXACT TYPE AND LOCATION WITH LANDLORD AND LOCAL UTILITY COMPANY. |
| 12 | NEW WATER HEATER T.P.R.V. DRAIN WATER HEATER PAN. PAN TO DRAIN TO FLOOR DRAIN LOCATION OR AS REQUIRED. REFER TO RISER DIAGRAM. |

## SEWER LOADING CRITERIA:

LOADING REQUIREMENTS AS PER LA TITLE 51, PART XIII, CHAPTER 15
A. ASSEMBLY (CHURCHES):
1. 5 GPD/PERSON @ 194 PERSONS (SEE A001) = 970 GPD

## PLUMBING LEGEND

| SYMBOL | DESCRIPTION |
|---|---|
| | SANITARY SEWER WASTE LINE |
| | SANITARY SEWER VENT LINE |
| | COLD WATER LINE |
| HW HW | HOT WATER LINE |
| | HOT WATER RETURN LINE |
| L | LAVATORY |
| ECO | EXTERIOR CLEANOUT |
| WCO | WALL CLEANOUT |
| FCO | FLOOR CLEANOUT |
| HB | HOSE BIBB |
| FD | FLOOR DRAIN |
| HD | HUB DRAIN |
| WH | WATER HEATER |
| WM | WASHING MACHINE |
| SK | SINK |
| FSK | FLOOR SINK |
| 3SK | 3–COMPARTMENT SINK |
| HSK | HAND WASH SINK |
| US | UTILITY SINK |
| DF | DRINKING FOUNTAIN |
| U | URINAL |
| WC | WATER CLOSET / TOILET |
| GT | GREASE TRAP |
| VTR | VENT THROUGH ROOF |
| TD | TROUGH DRAIN |
| FV | FLUSH VALVE |
| LS | LIFT STATION |
| STP | SEWER TREATMENT PLANT |

## PLUMBING FIXTURE SCHEDULE

| FIXTURE DATA | | | | | CONNECTION DATA | | | | | REMARKS |
|---|---|---|---|---|---|---|---|---|---|---|
| FIXTURE | QTY. | MFG. | CATALOG NO. | COLOR | SOIL SIZE | VENT SIZE | TRAP | WATER COLD | WATER HOT | |
| WATER CLOSET (WC) | 1 | *CRANE | 31054 | WHITE | 4" | 3" | 3" | 1/2" | --- | WHITE OPEN HINGED SEAT, LEFT HAND TRIP LEVER MODEL #3544 ADA |
| LAVATORY (L1) | 1 | *CRANE | IH–364–V | WHITE | 1 1/2" | 1 1/2" | 1 1/2" | 1/2" | 1/2" | FAUCET 4" CTRS. POP–UP 23"x21" VITREOUS CHINA |
| FLOOR DRAIN (FD) | 1 | *JOSAM | 30000–S–Z | ---- | 3" | 2" | 3" | --- | --- | w/6" STRAINER |
| TRAP PRIMER (TP) | 1 | *WATTS | A200S/LF | ---- | --- | --- | --- | 1/2" | --- | "LOW FLOW" MODEL |
| DRINKING FOUNTAIN (DF) | 1 | *ELKAY | LZSTL8LC | S.S | 1 1/2" | 1 1/2" | 1 1/2" | 1/2" | --- | HI–LO ADA MODEL |
| SHOWER (S1) | 1 | *CRANE | FIBERGLASS | WHITE | 2" | 2" | 2" | 3/4" | 3/4" | FIBERGLASS INSERT |
| HAND WASH SINK (HSK) | 1 | *ELKAY | IH–364–V | S.S | 1 1/2" | 1 1/2" | 1 1/2" | 1/2" | 1/2" | FAUCET: 4" CTRS. POP–UP 23"x21" VITREOUS CHINA |
| UTILITY SINK (MS) | 1 | *ELKAY | ---- | PLAS. | 2" | 1 3/4" | 2" | 3/4" | 3/4" | FAUCET 4" CTR. GOOSENECK |

* OR APPROVED EQUAL (TYPICAL ALL RESTROOMS)

## RESTROOM ACCESSORIES SCHEDULE

| MRK | # | MANUFACTURER | DESCRIPTION | MODEL NO. | REMARKS |
|---|---|---|---|---|---|
| A | 2 | BOBRICK | SINGLE ROLL TOILET TISSUE HOLDER | B–667 | SURFACE MOUNTED |
| B | 2 | BOBRICK | MIRROR – CHANNEL FRAME – 24" X 36" | B–290 1830 | APPLY CLEAR SILICONE CAULK AROUND PERIMETER |
| C | 2 | BOBRICK | GRAB BAR (36") | B–5806 X 36 | INSTALL PER CODE REQUIREMENT |
| D | 2 | BOBRICK | GRAB BAR (42") | B–5806 X 42 | INSTALL PER CODE REQUIREMENT |
| E | 2 | BOBRICK | B–359 S.S. PAPER TOWEL DISPENSER | B–359 | IN WALL MOUNT |
| F | 2 | TRIMCO | WALL DOOR STOP – STAINLESS | 1270CV–SS | INSTALL PER SHEET A–5 DETAILS |
| G | 2 | BOBRICK | SOAP DISPENSER | B–155 | SURFACE MOUNTED |
| H | 2 | BOBRICK | S.S. GARBAGE HOLDER | B–369 | IN WALL MOUNT |
| | | | | | |

NOTES:
1. CONTRACTOR SHALL INSTALL BLOCKING IN WALLS AT INDICATED LOCATIONS OF TOILET ACCESSORIES.
2. CONTRACTOR SHALL INSTALL EQUIPMENT PER MANUFACTURES SPECIFICATIONS AND IN ACCORDANCE WITH A.D.A. MOUNTING HEIGHTS. (REFER TO MANUFACTURES SPECIFICATION SHEETS)
3. ALL TOILET ACCESSORIES ARE TO BE AS SPECIFIED OR APPROVED EQUAL. VERIFY ALL ACCESSORIES WITH OWNER PRIOR TO PURCHASE AND INSTALLATION.

NOBLES & ASSOCIATES L.L.C.
PROFESSIONAL ENGINEERS, LAND SURVEYORS, & DESIGNERS
562 COLUMBIA STREET, BOGALUSA, LA. 70427 P: 985-723-0380
800 MARINERS PLAZA, SUITE 808, MANDEVILLE, LA. 70448 P: 985-727-7221

NEW BUILDING FOR
SUPERIOR AVENUE CHURCH
SANCTUARY
HIGHWAY 21, BOGALUSA, LA 70427

| Rev. No. | Date | Description |
|---|---|---|
| | | |

ENGINEER OF RECORD
NAME GEORGE NOBLES
NUMBER 31767

WATER PLAN
SEWER PLAN

Job No. E-00165
Dwn. SWL Chk. GBN
Date 01/25/2022 Rev. REV. 0

P101
Sheet 1 Of *

THESE DRAWINGS ARE THE SOLE PROPERTY OF NOBLES & ASSOCIATES L.L.C., AND ARE ISSUED AS INSTRUMENTS OF SERVICE. THESE DRAWINGS SHALL NOT BE COPIED, REPRODUCED OR USED IN ANY MANNER WITHOUT WRITTEN CONSENT OF NOBLES & ASSOCIATES L.L.C.

REVISED: Z: ENGINEERING\NEW JOBS\E-00165\Superior Avenue Church\DWG\WM\Purpose

COPYRIGHT 2021, NOBLES & ASSOCIATES, L.L.C.

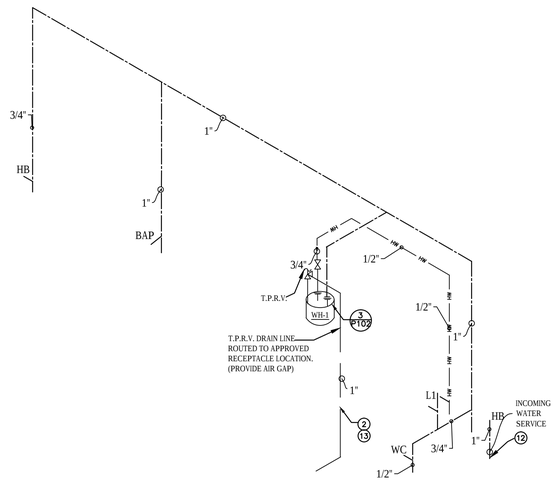


1 P102 WATER SUPPLY B-B RISER DIAGRAM

SCALE: NTS

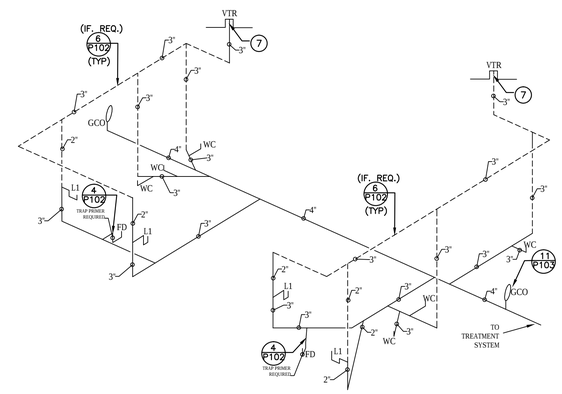


3 P102 SEWER A-A RISER DIAGRAM

SCALE: NTS

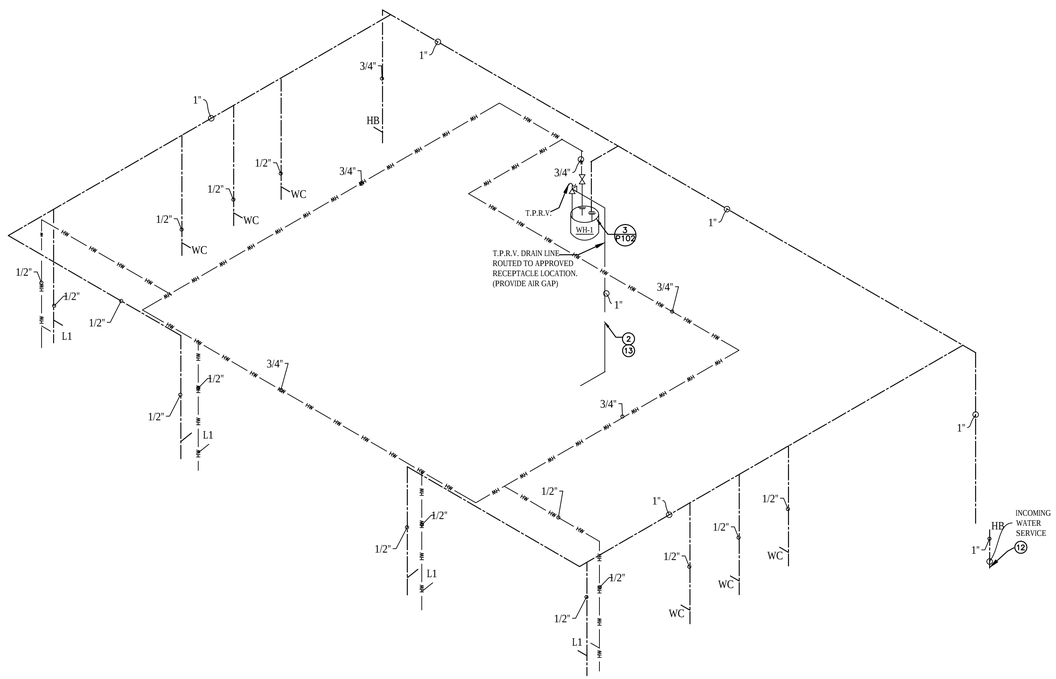


2 P102 WATER SUPPLY A-A RISER DIAGRAM

SCALE: NTS

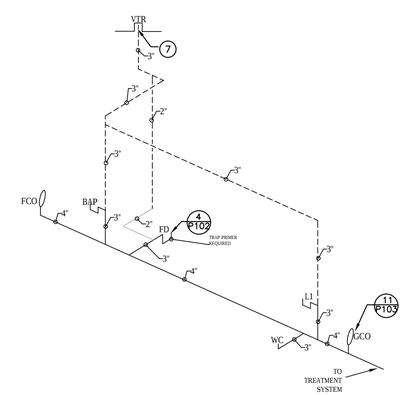


4 P102 SEWER A-A RISER DIAGRAM

SCALE: NTS

PRELIMINARY DOCUMENT

NOT INTENDED FOR CONSTRUCTION, BIDDING, SALES OR ISSUANCE OF A PERMIT

NOBLES & ASSOCIATES L.L.C.
PROFESSIONAL ENGINEERS, LAND SURVEYORS, & DESIGNERS
562 COLUMBIA STREET, BOGALUSA, LA. 70427 P: 985-723-0380
800 MARINERS PLAZA, SUITE 808, MANDEVILLE, LA. 70448 P: 985-727-7221

NEW BUILDING FOR

# SUPERIOR AVENUE CHURCH

SANCTUARY

HIGHWAY 21, BOGALUSA, LA 70427

| Rev. No. | Date | Description |
|---|---|---|
| | | |

ENGINEER OF RECORD
NAME GEORGE NOBLES
NUMBER 31767

SEWER RISER
WATER RISER

Job No. E-00165

| Dwn. | Chk. |
|---|---|
| SWL | GBN |
| Date | Rev. |
| 01/25/2022 | REV. 0 |

P102
Sheet 1 Of *

THESE DRAWINGS ARE THE SOLE PROPERTY OF NOBLES & ASSOCIATES L.L.C., AND ARE ISSUED AS INSTRUMENTS OF SERVICE. THESE DRAWINGS SHALL NOT BE COPIED, REPRODUCED OR USED IN ANY MANNER WITHOUT WRITTEN CONSENT OF NOBLES & ASSOCIATES L.L.C.

REVISED: Z:\ENGINEERING\NEW JOBS\E-00165\Superior Avenue Church\DWG\MUB\Purpose

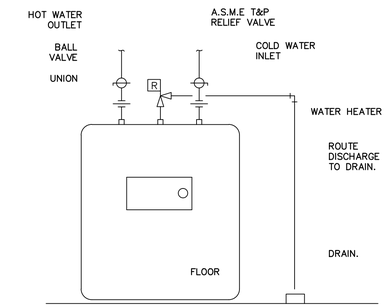


1 POINT-OF-USE WATER HEATER
SCALE: NTS

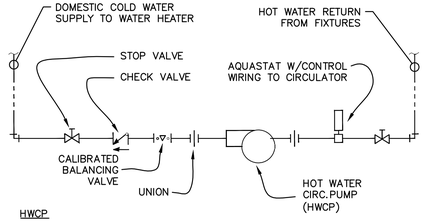


HWCP
GRUNDFOS MODEL: UP15-42-SF
GPM: 1
FT. HEAD: 20
ELEC. SERVICE: 120-1-60
HP: 1/25

2 HOT WATER CIRCULATION SYSTEM PIPING DIAGRAM (HWCP)
SCALE: NTS

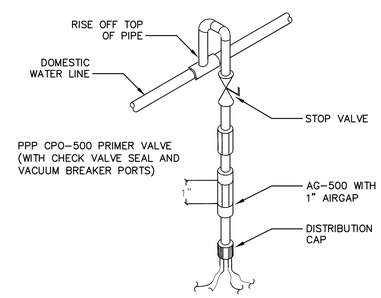


3 TRAP PRIMER ASSEMBLY DETAIL
SCALE: NTS

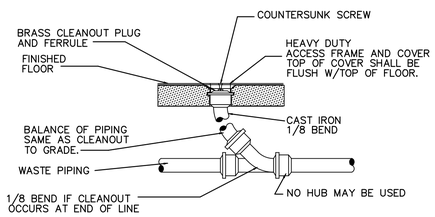


4 FLOOR CLEANOUT DETAIL
SCALE: NTS

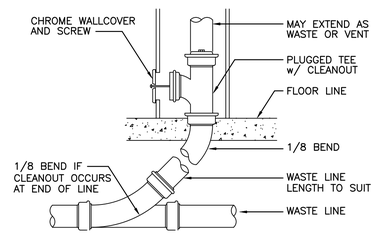


5 WALL CLEANOUT DETAIL
SCALE: NTS

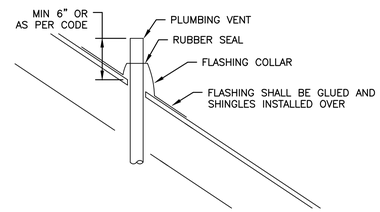


6 VENT THROUGH ROOF DETAIL
SCALE: NTS

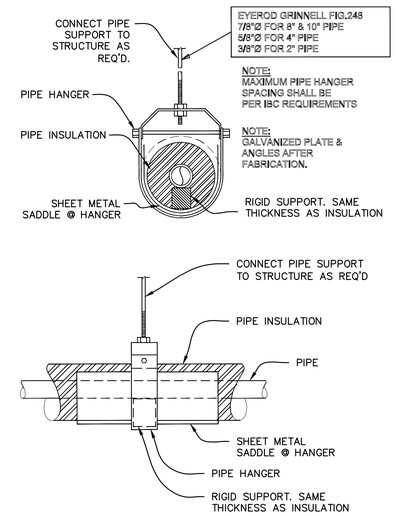


13 INSULATED PIPE HABNGER DETAIL
SCALE: NTS

## GENERAL PLUMBING NOTES:

1. LICENSED PLUMBING CONTRACTOR SHALL OBTAIN ALL NECESSARY PERMITS REQUIRED BY LOCAL CODE.
2. WATER SUPPLY AND SEWER SYSTEMS SHALL BE PERMITTED AND INSPECTED BY GOVERNING AUTHORITY PRIOR TO BUILDING OCCUPANCY AND PROJECT CLOSEOUT.
3. THE WORK UNDER THIS SECTION SHALL INCLUDE ALL LABOR, MATERIALS AND EQUIPMENT FOR THE COMPLETE INSTALLATION OF THE PLUMBING SYSTEM AS SHOWN ON THE PLANS AND SPECIFICATIONS.
4. NO DEVIATIONS FROM THE PLANS SHALL COMMENCE WITHOUT PRIOR WRITTEN CONSENT OF THE DESIGN PROFESSIONAL.
5. CONTRACTOR SHALL VERIFY ALL DIMENSIONS AND COORDINATE WITH OTHER TRADES PRIOR TO TYING INTO EXISTING STRUCTURES AND UTILITIES.
6. VERIFY THE LOCATION OF ALL PIPES, DUCTS, FIXTURES, ETC. RUN PRELIMINARY LEVELS AND CHECK WITH OTHER TRADES TO AVOID POTENTIAL CONFLICTS.
7. ALL WORK SHALL BE PERFORMED AND INSPECTED IN ACCORDANCE WITH FEDERAL, STATE, AND LOCAL CODES, LAWS, ORDINANCES, RULES, REGULATIONS AND REQUIREMENTS APPLICABLE TO THE PARTICULAR CLASS OF WORK.
8. CONTRACTOR SHALL COORDINATE ALL WORK WITH OTHER TRADES TO AVOID CONFLICTS & DELAYS. RELOCATION OF DUCTWORK, EQUIPMENT PIPING, VALVES, ETC., REQUIRED AS A RESULT OF FAILED COMMUNICATION SHALL BE MADE AT THE CONTRACTOR'S SOLE EXPENSE WITHOUT ADDITIONAL COST TO THE OWNER.
9. INSTALLATION PROCEDURES AND MATERIALS SHALL BE IN ACCORDANCE WITH THE LATEST ADOPTED CODES AND STANDARDS.
10. WELDING PROCEDURES, WELDERS AND OPERATORS SHALL BE CERTIFIED IN ACCORDANCE WITH ASME B 31.1, OR ASME B 31.9, AS APPLICABLE, FOR SHOP AND PROJECT SITE WELDING OF PIPE WORK.
11. CERTIFY WELDING OF PIPING WORK USING STANDARD PROCEDURE SPECIFICATIONS BY, AND WELDERS TESTED UNDER SUPERVISION OF NATIONAL CERTIFIED PIPE WELDING BUREAU (NCPWB).
12. WHERE PLASTIC PIPING IS INDICATED TO TRANSPORT NON-PORTABLE WATER, PROVIDE PIPES AND FITTINGS BEARING APPROVAL LABEL BY NATIONAL SANITATION FOUNDATION (NSF).
13. COPPER TUBE AND FITTINGS:
    A. COPPER TUBE: ASTM B 88 TYPE (WALL THICKNESS), AS INDICATED, FOR EACH SERVICE; HARD-DRAWN OR SOFT-DRAWN TEMPER, AS INDICATED, EXCEPT AS OTHERWISE INDICATED.
    B. CAST COPPER SOLDER JOINT FITTINGS: ANSI B16.18.
    C. WROUGHT COPPER SOLDER JOINT FITTINGS: ANSI B16.22
14. BRASS PIPE FITTINGS:
    A. RED BRASS PIPE: ASTM B 43 IN REGULAR WEIGHT.
    B. CAST BRONZE THREADED FITTINGS: ANSI B16.15, CLASS 150, OR 250, AS REQUIRED.
    C. CAST BRONZE THREADLESS FITTINGS: ASTM B 61.
15. PLASTIC PIPES AND PIPE FITTINGS
    A. POLYVINYL CHLORIDE PIPE (PVC): ASTM D 1785, IN SCHEDULE WEIGHT, AS INDICATED ON THE DRAWINGS.
    B. POLYVINYL CHLORIDE WATER PIPE (PVC): AWWA C 900 IN
    C. POLYVINYL CHLORIDE SEWER PIPE (PVC): ASTM D 2729.
    D. POLYVINYL CHLORIDE DRAIN, WASTE, AND VENT PIPE (PVC-DWV): ASTM D 2665.
    E. POLYVINYL CHLORIDE TYPE PSM SEWER PIPE: ASTM D 3034.
    F. PVC FITTINGS:
1. SCHEDULE 40 SOCKET: ASTM D 2466
2. SCHEDULE 80 SOCKET: ASTM D 2467
3. SCHEDULE 80 THREADED: ASTM D 2464
4. DWV SOCKET: ASTM D 2665
5. SEWER SOCKET: ASTM D 2729
6. SOLVENT CEMENT: ASTM D 2564
7. SOLVENT CEMENT (PVC TO ABS): ASTM D 3138
16. INSULATION:
    A. MANUFACTURERS INSULATION PRODUCTS SHALL BE TYPE AS MANUFACTURED BY KNAUF FIBER GLASS, OWENS-CORNING FIBERGLASS, AND SCHULLER.
    B. INSULATED WATER PIPING INSIDE BUILDING PIPING SHALL BE INSULATED WITH FIBERGLASS HEAVY DENSITY INSULATION HAVING A THERMAL CONDUCTANCE IN THE RANGE OF 0.23 AT A MEAN TEMPERATURE OF 75°F. PROVIDE INSULATION WITH A FACTORY APPLIED FIRE RETARDANT, ALL SERVICE JACKET (ASJ). BUTT STRIPS SHALL BE OF SAME MATERIAL AS ALL SERVICE JACKETS AND EMPLOY THE SAME ADHESIVE AS IS USED ON THE JACKET LAP SEAL. ALL VALVES: AND FITTINGS SHALL BE INSULATED WITH THE SAME THICKNESS INSULATION AS SPECIFIED FOR PIPING SYSTEMS. INSULATION SHALL BE APPLIED TO THE FOLLOWING PIPING SYSTEM WITH THICKNESS AS INDICATED
    C. PIPING SYSTEM, PIPE SIZE, THICKNESS DOMESTIC COLD WATER, ALL SIZES, 1/2" DOMESTIC HOT WATER, 2" AND SMALLER, 1"
    D. FURNISH AND INSTALL ZESTON 2000 OR PROTO PVC INSULATED FITTING COVERS ON ALL PIPE FITTINGS, FLANGES, VALVES, AND PIPE TERMINATIONS. INSTALL PER MANUFACTURER'S RECOMMENDATIONS.
    E. PIPE INSULATION SHALL RUN CONTINUOUS THROUGH NON-RATED WALLS AND PARTITIONS, EXCEPT WHERE PIPE PASSES THROUGH FIRE RATED WALLS. PENETRATION OF FIRE RATED WALLS SHALL BE ACCOMPLISHED BY MEANS OF FIRE RATED PIPE PENETRATIONS, AS DETAILED BY U.L.
17. SANITARY SEWER SHALL BE DWV SCHEDULE 40 PVC AS ALLOWED BY LOCAL CODES.
18. GENERAL CONTRACTOR WILL PROVIDE OPENINGS IN ROOF, FLOORS AND EXTERIOR WALLS FOR PLUMBING EQUIPMENT AND PIPE PENETRATIONS.
19. INSULATE ALL ABOVE GRADE DOMESTIC WATER PIPE AND COLD CONDENSATE DRAIN PIPES.
20. SHOCK ABSORBERS (SA) SHALL BE WADE #10, WATTS #SO-050, OR EQUAL.
21. DOMESTIC WATER PIPING BELOW GRADE SHALL BE TYPE "K" SOFT DRAWN COPPER PIPE WRAPPED WITH VINYL TAPE OR PEX WRAPPED WITH VINYL TAPE. NO JOINTS BELOW FLOOR SLAB.
22. DOMESTIC WATER PIPING ABOVE GRADE SHALL BE HARD DRAWN TYPE "L" COPPER WITH WROUGHT SWEAT SOLDER JOINTS OR 25 YR PEX WATER PIPING WITH APPROVED FITTINGS AND CONNECTORS.
23. VALVES SHALL BE FULL PORT BALL VALVES. NIBCO, OR EQUAL.

NOTE: 5LB. LEAD FLASHING SHALL BE FORMED TO CHIPPED CONCRETE WITH A POSITIVE SLOPE TO CLAMP DEVICE. PROVIDE NON-SHRINK GROUT UNDER 24" WIDE LEAD FLASHING AS REQ'D TO FACILITATE POSITIVE SLOPE. (LEAD FLASHING ONLY)

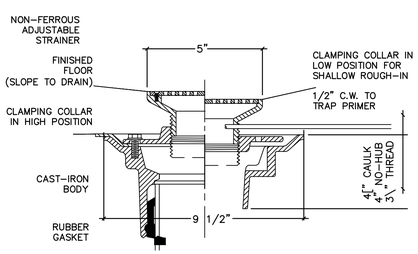


NOTE: THE GENERAL CONTRACTOR SHALL PROVIDE A ONE PIECE WATER PROOF MEMBRANE FLOOR AND BASE IN THE TOILET ROOM(S).

7 FLOOR DRAIN DETAIL
SCALE: NTS

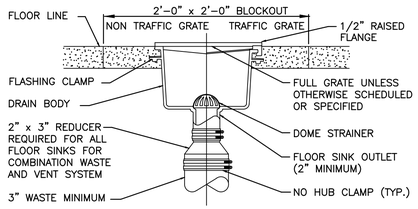


8 FLOOR SINK DETAIL
SCALE: NTS

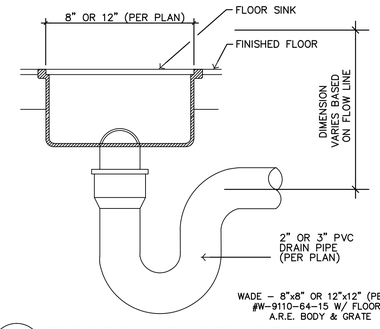


9 FLOOR SINK PLUMBING DETAIL
SCALE: NTS

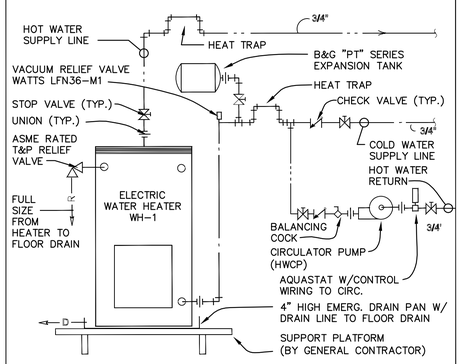


NOTE: WATER HEATER RELIEF LINE AND EMERGENCY DRAIN PAN LINE SHALL TERMINATE IN FLOOR DRAIN WITH AN AIR GAP OF 2 TIMES THE PIPE DIAMETER. MINIMUM 2 INCH DIA.

14 WATER HEATER PIPING DIAGRAM
SCALE: NTS

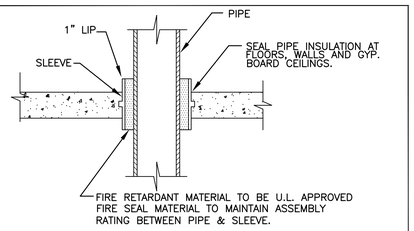


| MATERIAL | U.L. NUMBER REQ'D GYPSUM WALL |
|---|---|
| STEEL PIPE | 428 |
| STEEL PIPE W/INSULATION | 444 |
| COPPER PIPE | 442 |
| COPPER PIPE W/INSULATION | 445 |

10 PIPE SLEEVE DETAIL
SCALE: NTS

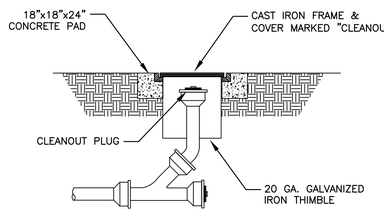


11 EXTERIOR CLEANOUT DETAIL
SCALE: NTS

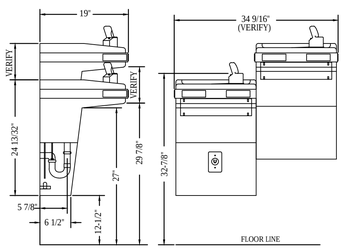


ELEVATIONS-ELKAY EZSTL8C

12 DRINKING FOUNTAIN DETAIL
SCALE: NTS

## APPROVED EQUALS:

THE FOLLOWING MANUFACTURERS OF PLUMBING FIXTURES AND DRAINS OF COMPARABLE QUALITY ARE CONSIDERED APPROVED EQUALS, SUBJECT TO COMPLIANCE WITH THE REQUIREMENTS OF THE SPECIFICATIONS.

| | |
|---|---|
| PLUMBING FIXTURES: | AMERICAN STANDARD, MANSFIELD, SLOAN, TOTO, ZURN |
| DRAINS, CLEANOUTS, CARRIERS: | JOSAM, J.R. SMITH, MIFAB, WATTS, ZURN |
| SINKS: | ADCANCE TOBCO, GRIFFIN, JUST |
| SERVICE SINKS: | ACORN, FLORSTONE, MUSTEE, STERN WILLIAMS, ZURN |
| HOSE BIBS: | J.R. SMITH, MIFAB, WATTS, ZURN |
| FLUSH VALVES: | DELANY, ZURN |
| TEMPERING VALVE: | BRADLEY, LAWLER, POWERS |
| FAUCETS: | CHICAGO, DELTA COMMERCIAL, SLOAN, T&S, ZURN |
| ELECTRIC WATER COOLERS: | ACORN, HAWS, HALSEY TAYLOR, OASIS |
| TOILET SEATS: | BEMIS, BENEKE, CENTOCO, ZURN |
| SHOWERS: | AQUARIUS, AQUABATH |
| SHOWER VALVES: | BRADLEY, DELTA COMMERCIAL, SLOAN, SPEAKMAN, ZURN |
| SUPPLIES: | BRASSCRAFT, EASTMAN, McGUIRE, SPECIFIED TRIM, ZURN |
| WATER HEATER: | SMITH, STATE |

PRELIMINARY DOCUMENT
NOT INTENDED FOR CONSTRUCTION, BIDDING, SALES OR ISSUANCE OF A PERMIT

NOBLES & ASSOCIATES L.L.C.
PROFESSIONAL ENGINEERS, LAND SURVEYORS, & DESIGNERS
562 COLUMBIA STREET, BOGALUSA, LA. 70427 P: 985-723-0380
800 MARINERS PLAZA, SUITE 800, MANDEVILLE, LA. 70448 P: 985-727-7221

NEW BUILDING FOR
SUPERIOR AVENUE CHURCH
SANCTUARY
HIGHWAY 21, BOGALUSA, LA 70427

| Rev. No. | Date | Description |
|---|---|---|
| | | |

ENGINEER OF RECORD
NAME GEORGE NOBLES
NUMBER 31767

PLUMBING NOTES
DETAILS

Job No. E-00165
Dwn. SWL Chk. GBN
Date 01/25/2022 Rev. REV. 0

P103
Sheet 1 Of *

COPYRIGHT 2021 NOBLES & ASSOCIATES, L.L.C.
REVISED: Z:\ENGINEERING\NEW JOBS\E-00165\Superior Avenue Church\DWG\MMBPurpose
THESE DRAWINGS ARE THE SOLE PROPERTY OF NOBLES & ASSOCIATES L.L.C., AND ARE ISSUED AS INSTRUMENTS OF SERVICE. THESE DRAWINGS SHALL NOT BE COPIED, REPRODUCED OR USED IN ANY MANNER WITHOUT WRITTEN CONSENT OF NOBLES & ASSOCIATES L.L.C.

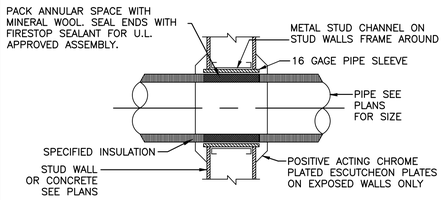


1 PIPE SLEEVE DETAIL
SCALE: NTS

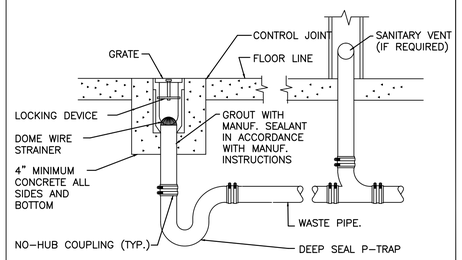


2 TRENCH DRAN DETAIL
SCALE: NTS

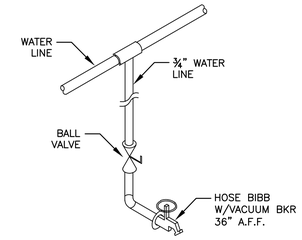


NOTE:
ALL WATER LINES SHALL BE INSULATED PER SPECIFICATIONS

3 HOSE BIBB DETAIL
SCALE: NTS

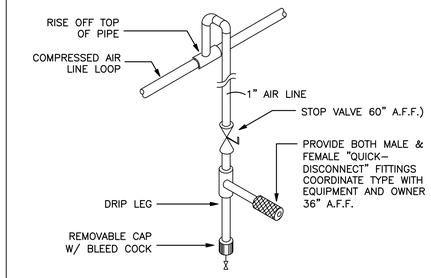


4 COMPRESSED AIR STATION DETAIL
SCALE: NTS

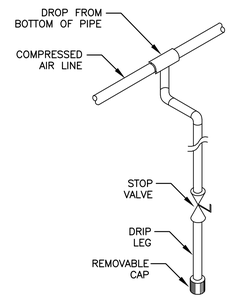


5 COMPRESSED AIR DRIP LEG DETAIL
SCALE: NTS

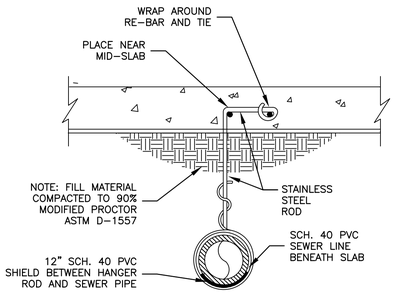


6 UNDERGROUND SEWER SUPPORT
SCALE: NTS

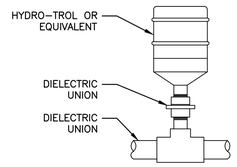


| J.R. SMITH WATER HAMMER ARRESTOR SCHEDULE | | | | | | |
|---|---|---|---|---|---|---|
| PCN | 5005 | 5010 | 5020 | 5030 | 5040 | 5050 |
| FIXTURE UNIT RATING | 1-11 | 12-32 | 33-60 | 61-113 | 114-154 | 155-330 |

7 WATER HAMMER ARRESTER
SCALE: NTS

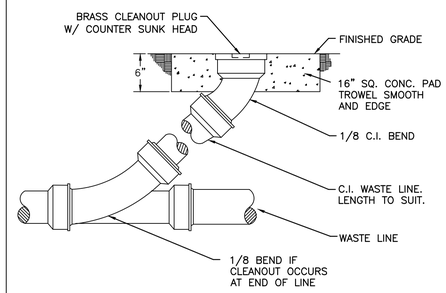


8 GROUND CLEANOUT DETAIL (CAST IRON)
SCALE: NTS

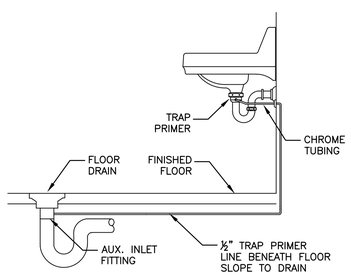


9 TRAP PRIMER DETAIL
SCALE: NTS

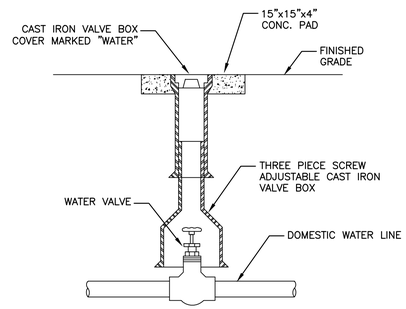


10 WATER VALVE DETAIL
SCALE: NTS

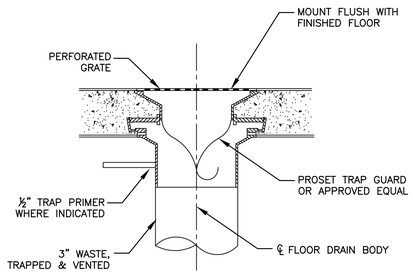


11 FLOOR DRAIN DETAIL
SCALE: NTS

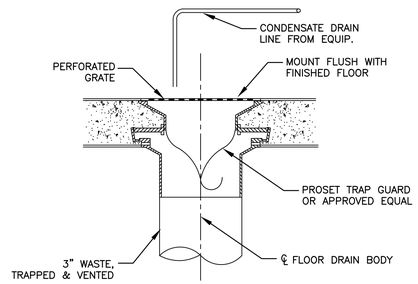


12 FLOOR DRAIN DETAIL (NO TRAP PRIMER)
SCALE: NTS

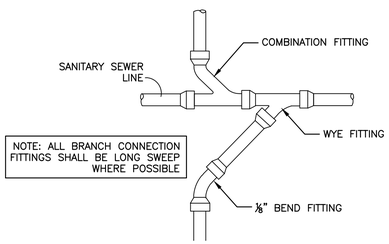


NOTE: ALL BRANCH CONNECTION FITTINGS SHALL BE LONG SWEEP WHERE POSSIBLE

13 SANITARY CROSS FITTING DETAIL
SCALE: NTS

PRELIMINARY DOCUMENT
NOT INTENDED FOR CONSTRUCTION, BIDDING, SALES OR ISSUANCE OF A PERMIT

NOBLES & ASSOCIATES L.L.C.
PROFESSIONAL ENGINEERS, LAND SURVEYORS, & DESIGNERS
562 COLUMBIA STREET, BOGALUSA, LA. 70427 P: 985-723-0380
800 MARINERS PLAZA, SUITE 800, MANDEVILLE, LA. 70448 P: 985-727-7221

NEW BUILDING FOR
SUPERIOR AVENUE CHURCH
SANCTUARY
HIGHWAY 21, BOGALUSA, LA 70427

| Rev. No. | Date | Description |
|---|---|---|
| | | |

ENGINEER OF RECORD
NAME GEORGE NOBLES
NUMBER 31767

PLUMBING DETAILS

Job No. E-00165
Dwn. SWL Chk. GBN
Date 01/25/2022 Rev. REV. 0

P104
Sheet 1 Of *

COPYRIGHT 2021 NOBLES & ASSOCIATES, L.L.C.
THESE DRAWINGS ARE THE SOLE PROPERTY OF NOBLES & ASSOCIATES L.L.C., AND ARE ISSUED AS INSTRUMENTS OF SERVICE. THESE DRAWINGS SHALL NOT BE COPIED, REPRODUCED OR USED IN ANY MANNER WITHOUT WRITTEN CONSENT OF NOBLES & ASSOCIATES L.L.C.

REVISED: Z:\ENGINEERING\NEW JOBS\E-00165\Superior Avenue Church\DWG\MUBPurpose

COPYRIGHT 2021 NOBLES & ASSOCIATES, L.L.C.

DESIGN INFORMATION AND LOADS

A. FOUNDATION DESIGN IN ACCORDANCE WITH 2015 IBC FOR THE FOLLOWING DESIGN CRITERIA:

| | | |
|---|---|---|
| B. | BUILDING USE | ASSEMBLY |
| C. | GROUND SNOW LOAD | 05 PSF |
| D. | LIVE LOAD | 20 PSF |
| E. | DEAD LOAD | 10 PSF |
| F. | WIND SPEED (ULT) | 132 MPH |
| G. | EXPOSURE | C |
| H. | Sos | 0.101 |
| I. | SDC | B |

EARTHWORK

A. FOUNDATION DESIGN
   1. ALLOWABLE SOIL BEARING PRESSURE = 1500 PSF
   2. COEFFICIENT OF FRICTION = 0.20
   3. LATERAL EARTH PRESSURE = 100 PSF/FT OF DEPTH
B. THE FOUNDATION HAS BEEN DESIGNED FOR A MINIMUM SOIL BEARING CAPACITY ASSUMING COMPRESSIVE SOIL (NON-EXPANSIVE) WITH A MINIMUM GROSS SETTLEMENT OF <1".
C. A SOIL REPORT IS REQUIRED TO VERIFY THE DESIGN PARAMETERS. THE CONTRACTOR/OWNER SHALL IMMEDIATELY CONTACT THE ENGINEER IF SOIL CONDITIONS FAIL TO MEET THE DESIGN ASSUMPTIONS. FAILURE TO PROPERLY TEST THE SOIL WILL VOID THIS DESIGN AND THE CONTRACTOR/OWNER SHALL HOLD THE ENGINEER HARMLESS.
D. THE BUILDING PAD AREA SHALL BE STRIPPED OF TOPSOIL, DEBRIS AND VEGETATION. ALL NON-STRUCTURAL FILL SOILS AND ANY REMAINING LOOSE NATURAL SOILS SHALL BE REMOVED TO EXPOSE SUITABLE NATURAL SOILS.
E. CONTRACTOR SHALL PROVIDE POSITIVE DRAINAGE AWAY FROM THE FOUNDATION TO PREVENT EXCESS MOISTURE FROM AFFECTING THE SUPPORTING SOIL.
F. PROOF ROLL THE ENTIRE BUILDING PAD AREA TO LOCATE AND REMOVE ALL SOFT SPOTS. REPLACE WITH COMPACTED STRUCTURAL FILL.
G. PLACE ALL FOOTING AND SLABS ON UNDISTURBED NATURAL SOIL OR ON PROPERLY COMPACTED STRUCTURAL FILL. CONTRACTOR SHALL VERIFY THAT THE SOIL UNDER FOOTINGS IS SUITABLE TO SUPPORT THE FOUNDATION.
H. STRUCTURAL FILL SHOULD CONSIST OF WELL-GRADED SANDY GRAVELS WITH A MAXIMUM PARTICLE SIZE OF 3 INCHES AND 5 TO 6 PERCENT FINES (MATERIAL PASSING THE NO. 200 SIEVE). THE LIQUID LIMIT OF THE FINES SHOULD NOT EXCEED 35 AND THE PLASTICITY INDEX SHOULD BE BELOW 15. ALL FILL SOILS SHOULD BE FREE FROM LIQUIDS, HIGHLY ORGANIC MATERIAL, FROZEN SOIL AND OTHER DELETERIOUS MATERIALS. STRUCTURAL FILL SHOULD BE PLACED IN 6 TO 8 INCH LIFTS AT A MOISTURE CONTENT WITHIN 2 PERCENT OF OPTIMUM AND COMPACTED TO AT LEAST 95 PERCENT OF MODIFIED PROCTER DENSITY (ASTM D1157) UNDER THE BUILDING AND 90 PERCENT UNDER CONCRETE FLATWORK.
I. IT IS THE RESPONSIBILITY OF THE CONTRACTOR TO ENSURE THAT THE DEPTH OF THE BOTTOM OF THE FOUNDATION IS FAR ENOUGH BELOW THE ADJACENT GRADE TO ENSURE ADEQUATE FROST PROTECTION.

CONCRETE AND REINFORCEMENT

A. MATERIAL STANDARDS
   1. CONCRETE
      a. FOOTINGS AND FOUNDATION WALLS: Fy = 3,000 PSI
      b. SLABS ON GRADE: = 3,500 PSI
      c. NORMAL WEIGHT OF AGGREGATES: ASTM C33
   2. CEMENT
      a. USE TYPE I/II CEMENT AS PER ASTM C150
      b. AIR-ENTRAINING ADMIXTURES (WHERE REQUIRED) ASTM C260
      c. CALCIUM CHLORIDE SHALL NOT BE USED.
   3. REINFORCING
      a. REBAR – ASTM A615 GRADE 60 (Fy = 60 KSI)
      b. WELDED WIRE – ASTM A1064
      c. EPOXY – SIMPSON SET-XP (ICC-ES-ESR-2508) OR HILTI HIT-RE 500-V3 (ICC-ES-ESR-3814)
   4. ANCHOR BOLTS/RODS
      a. STEEL COLUMN ANCHOR BOLTS/RODS – ASTM F1554 GRADE 36 WITH ASTM A563 HEAVY HEX NUTS AND HARDENED WASHERS.
      b. ADHESION (EPOXY) ANCHORS – SIMPSON SET-XP (ICC-ES-ESR-2508) OR HILTI HIT-RE 500-V3 (ICC-ES-ESR-3814).
      c. EXPANSION ANCHORS – SIMPSON STRONG-BOLT (ICC-ES-ESR-1771) OR HILTI QUICK BOLT VTZ (ICC-ES-ESR-3904)
      d. USE OF HOOKED ANCHOR RODS/BOLTS IS LIMITED UNDER THE ACI AND IBC. HEADED ANCHOR BOLTS/RODS MUST BE USED WHERE IDENTIFIED IN THE DETAILS.
B. DETAIL REINFORCING TO COMPLY WITH ACI 315 "MANUAL OF STANDARD PRACTICE FOR DETAILING REINFORCED CONCRETE STRUCTURES" AND THE CONCRETE REINFORCING STEEL INSTITUTE (CRSI) RECOMMENDATIONS.
   1. MINIMUM CLEAR CONCRETE COVER FOR REINFORCEMENT SHALL BE AS FOLLOWS UNLESS NOTED OTHERWISE:
      a. CONCRETE CAST DIRECTLY AGAINST AND PERMANENTLY EXPOSED TO EARTH = 3"
      b. CONCRETE EXPOSED TO WEATHER OR EARTH
         b.1. #5 BARS OR SMALLER = 1½"
         b.2. #6 BARS OR LARGER = 2"
      c. CONCRETE NOT EXPOSED TO WEATHER OR IN CONTACT WITH GROUND = 3/4"
      d. SLABS ON GRADE – AS SHOWN IN DETAILS. ¾" MIN. FROM TOP OF SLABS NOT EXPOSED TO WEATHER.
   2. LAP SPLICE LENGTHS (UNLESS NOTED OTHERWISE)
      a. f'c = 2,500-3,500 PSI
         a.1. #6 AND SMALLER – 36 BAR DIAMETERS
         a.2. #7 AND LARGER – 45 BAR DIAMETERS.
      b. f'c = 4,000 PSI OR GREATER
         b.1. #6 AND SMALLER – 29 BAR DIAMETERS
         b.2. #7 AND LARGER – 36 BAR DIAMETERS
      c. LAP SPLICE LENGTHS MAY BE DECREASED BY 25% FOR SLABS ON GRADE AND HORIZONTAL WALL REINFORCING.
      d. INCREASE LAP SPLICE LENGTHS BY 50% WHERE EPOXY COATED BARS ARE USED.
   3. STAGGER SPLICES IN WALL SO THAT NO TWO ADJACENT FORMS ARE SPLICED IN THE SAME LOCATION, UNLESS SHOWN OTHERWISE.
   4. MAKE ALL BARS CONTINUOUS AROUND CORNERS OR PROVIDE CORNER BARS OF EQUAL SIZE AND SPACING.
   5. VERTICAL BARS IN WALLS, GRADE BEAMS, AND PIERS TO TERMINATE IN FOOTINGS WITH ACI STANDARD HOOKS [12 BAR DIAMETERS] TO WITHIN 4" OF THE BOTTOM OF THE FOOTING UNLESS NOTED OTHERWISE.
   6. HORIZONTAL WALL REINFORCING SHALL TERMINATE AT THE ENDS OF WALLS WITH A 90 DEGREE HOOK PLUS A 6 BAR DIAMETER EXTENSION, UNLESS SHOWN OTHERWISE.
   7. HORIZONTAL WALL REINFORCING SHALL BE CONTINUOUS THOUGH CONSTRUCTION AND CONTROL JOINTS.
   8. SPLICES IN HORIZONTAL REINFORCEMENT SHALL BE STAGGERED. SPLICES IN TWO CURTAINS (WHERE USED) SHALL NOT OCCUR IN THE SAME LOCATION.
   9. USE CHAIRS OR OTHER SUPPORT DEVICES AS REQUIRED FOR PROPER CLEARANCES.
   10. REBAR HAIRPINS SHALL BE CENTERED IN SLABS AND SHALL BE WIRE TIED TO THE SLAB REINFORCING (IF ANY). REBAR HAIRPINS SHALL BE CONTINUOUS THROUGH WALLS AND PIERS; LAP SPLICES IN HAIRPINS MAY ONLY OCCUR IN THE FLOOR SLAB UNLESS NOTED OTHERWISE.
C. CONTROL JOINTS IN SLABS ON GRADE ARE RECOMMENDED TO CONTROL CRACKING. SEE PLANS FOR CONTROL JOINT SPACING AND DETAILS.
D. SLABS ON GRADE BEAMS SHOULD NOT HAVE JOINTS IN A HORIZONTAL PLANE. ALL REINFORCEMENT SHALL BE CONTINUOUS THROUGH ALL CONSTRUCTION JOINTS.
E. FLOOR SLAB THICKNESS AND REINFORCING SHOWN IN THESE DRAWINGS ARE ADEQUATE TO SUPPORT TYPICAL UNIFORM LOADS ONLY. NOBLES AND ASSOCIATES HAS NOT DESIGNED THE SLAB FOR ANY SPECIFIC CONCENTRATED LOAD SUCH AS THOSE FROM VEHICLES, STORAGE RACKS OR HEAVY EQUIPMENT. (UNLESS NOTED OTHERWISE)
F. WELDING OF REBAR IS NOT ALLOWED UNLESS SPECIFICALLY INDICATED HEREIN. ALL EMBEDMENTS, REINFORCING, AND DOWELS SHALL BE SECURELY TIED TO FRAMEWORK OR TO ADJACENT REINFORCING PRIOR TO PLACEMENT OF CONCRETE. TACK-WELDING OF REBAR JOINTS IN GRADE-BEAMS, WALLS, OR CAGES IS NOT ALLOWED. WHERE WELDING OF REBAR IS SHOWN IN THE DRAWINGS, ALL REBAR TO BE WELDED SHALL BE IN ACCORDANCE WITH ASTM A706, GRADE 60

SPECIAL INSPECTIONS

A. CONCRETE
   1. SPOT FOOTINGS – NOT REQUIRED (IBC 1705.3 EXCEPTION 1)
   2. CONTINUOUS FOOTINGS – REQUIRED (IBC 1705.3.2)
   3. SLABS – NOT REQUIRED (IBC 1705.3 EXCEPTION 3)
   4. GRADE BEAMS – REQUIRED (IBC 1705.3 EXCEPTION 4)
   5. WALLS – NOT REQUIRED (IBC 1705.3 EXCEPTION 4)
   6. ANCHOR BOLTS/RODS – REQUIRED (IBC TABLE 1705.3) SPECIAL INSPECTION MAY BE REQUIRED, SUBJECT TO APPROVAL OF BUILDING OFFICIAL.
B. STEEL REINFORCEMENT
   1. PLACEMENT – THIRD PARTY SPECIAL INSPECTION OF REINFORCING PLACEMENT NEED ONLY BE PERFORMED WHERE SPECIFICALLY REQUIRED BY BUILDING OFFICIAL.
   2. WELDING – SPECIAL INSPECTION OF REBAR WELDING IS REQUIRED. (IF USED)

MISCELLANEOUS

A. DO NOT SCALE DRAWINGS.
B. NO FIELD SUPERVISION OR CONTRACT ADMIN. WILL BE PROVIDED BY THE ENGINEER.
C. THE FOUNDATION HEREIN MEETS THE MINIMUM REQUIREMENTS OF THE IBC AND THE ACI GUIDELINES FOR DESIGN OF SLABS ON GROUND (ACI 360).
D. CONTRACTOR SHALL PLACE FORMS IN ACCORDANCE WITH STRUCTURAL DRAWINGS AND VERIFY ALL DIMENSIONS, OFFSETS, DROPS, INSERTS, BRICK LEDGES AND BLOCK OUTS PRIOR TO CONSTRUCTION.
E. CONTRACTOR SHALL NOTIFY ENGINEER OF ANY VARIATIONS IN DIMENSIONS.
F. CONTRACTOR SHALL REFER TO DRAWINGS AND SPECIFICATIONS OF OTHER TRADES AS THEY AFFECT THE OVERALL PROJECT.
G. THE ENGINEER IS NOT RESPONSIBLE FOR ANY DEVIATIONS FROM THESE PLANS UNLESS SUCH CHANGES ARE AUTHORIZED IN WRITING BY ENGINEER.
H. REFER TO METAL BUILDING PLAN FOR ANCHOR BOLT SIZING, LOCATION AND SPECIAL DETAILS.

LEGEND

- EDGE OF GRADE BEAM (FOOTING)
- LOCATION OF ELEVATION CHANGE
- AREA OF NEW FOUNDATION LEDGE

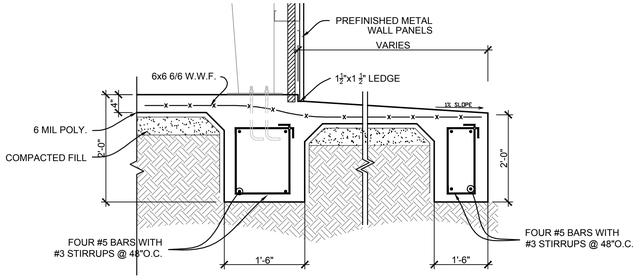


1 / S101 EXTERIOR ENTRY DETAIL (OVERHEAD DOOR)

SCALE: NTS

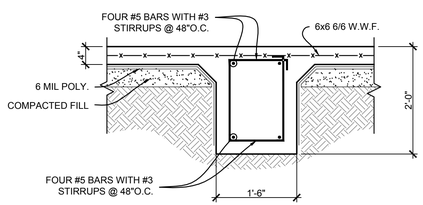


2 / S101 INTERIOR GRADE BEAM

SCALE: NTS

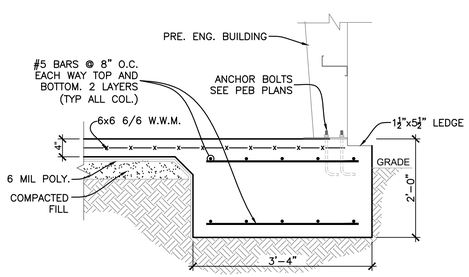


4 / S101 EXPANDED FOOTING AT COLUMN

SCALE: NTS

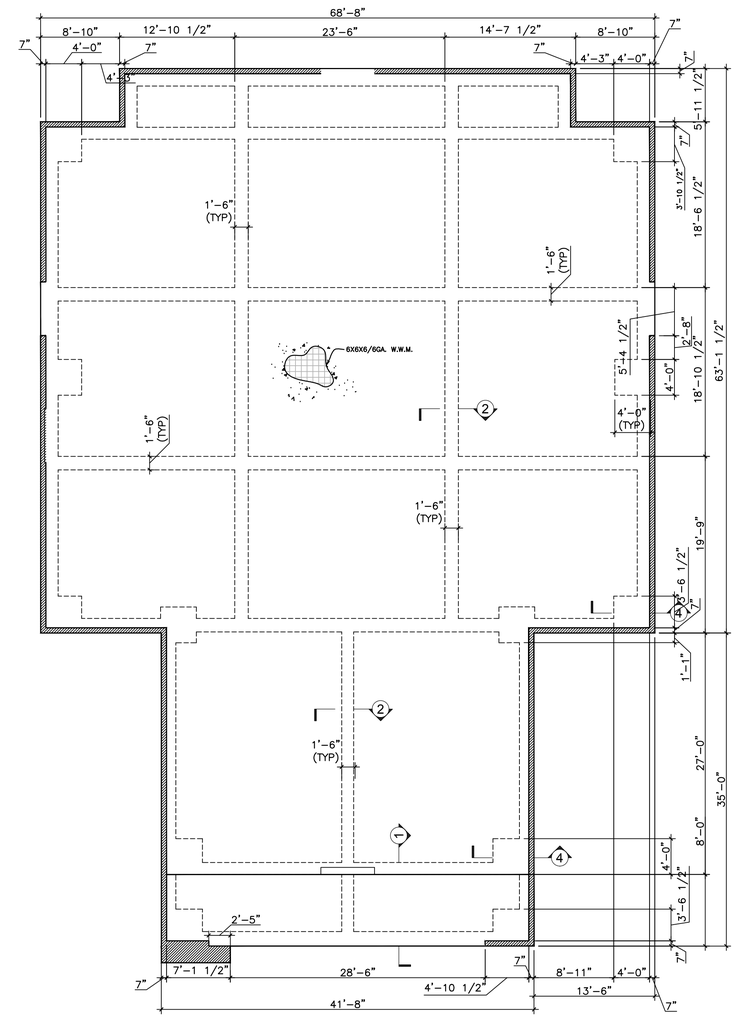


A / S101 FOUNDATION PLAN

SCALE: 1/8"=1'-0"

PRELIMINARY DOCUMENT

NOT INTENDED FOR CONSTRUCTION, BIDDING, SALES OR ISSUANCE OF A PERMIT

NOBLES & ASSOCIATES L.L.C.
PROFESSIONAL ENGINEERS, LAND SURVEYORS, & DESIGNERS
562 COLUMBIA STREET, BOGALUSA, LA. 70427 P: 985-723-0380
800 MARINERS PLAZA, SUITE 800, MANDEVILLE, LA. 70448 P: 985-727-7221

NEW BUILDING FOR

# SUPERIOR AVENUE CHURCH

SANCTUARY

HIGHWAY 21, BOGALUSA, LA 70427

| Rev. No. | Date | Description |
|---|---|---|
| | | |

ENGINEER OF RECORD
NAME GEORGE NOBLES
NUMBER 31787

FOUNDATION PLAN

| | |
|---|---|
| Job No. | E-00165 |
| Dwn. SWL | Chk. GBN |
| Date 01/25/2022 | Rev. REV. 0 |

Sheet S101 1 Of *

THESE DRAWINGS ARE THE SOLE PROPERTY OF NOBLES & ASSOCIATES L.L.C., AND ARE ISSUED AS INSTRUMENTS OF SERVICE. THESE DRAWINGS SHALL NOT BE COPIED, REPRODUCED OR USED IN ANY MANNER WITHOUT WRITTEN CONSENT OF NOBLES & ASSOCIATES L.L.C.

REVISED: Z:\ENGINEERING\NEW JOBS\E-00165\Superior Avenue\DWG\Multipurpose